3200 Gal.

120' / 132' / 135'

S-SERIES SPRAYER

PARTS MANUAL

Limited Warranty

Fast Ag Solutions warrants to the buyer that the new machinery is free from defects in material and workmanship.

This warranty is only effective as to any new machinery which has not been altered, changed, repaired or treated since its delivery to the buyer, other than by Fast Ag Solutions or its authorized dealers or employees, and does not apply to accessories, attachments, tools or parts, sold or operated with the new machinery, if they have not been manufactured by Fast Ag Solutions.

Fast Ag Solutions shall only be liable for defects in the materials or workmanship attributable to faulty material or bad workmanship that can be proved by the buyer, and specifically excludes liability for repairs arising as a result of normal wear and tear of the new machinery or in any other manner whatsoever, and without limiting the generality of the foregoing, excludes application or installation of parts not completed in accordance with this operator's manual, specifications, or printed instructions.

Written notice shall be given by registered mail, to the Manufacturer within seven (7) days after the defect shall have become apparent or the repairs shall have become necessary, addressed as follows:

Fast Ag Solutions

4130 Commerce Boulevard

Windom, MN 56101

This warranty shall expire one (1) year after the date of delivery of the new machinery.

If these conditions are fulfilled, Fast Ag Solutions shall at its own cost and at its own option either repair or replace any defective parts provided that the buyer shall be responsible for all expenses incurred as a result of repairs, labor, parts, transportation or any other work, unless Fast Ag Solutions has authorized such expenses in advance.

The warranty shall not extend to any repairs, changes, alterations, or replacements made to the new equipment other than by Fast Ag Solutions or its authorized dealers or employees.

This warranty extends only to the original owner of the new equipment.

Rubber parts (including tires, hoses, grommets) are not warrantied.

This warranty is limited to the terms stated herein and is in lieu of any other warranties whether express or implied, and without limiting the generality of the foregoing, excluding all warranties, express or implied or conditions whether statutory or otherwise as to quality and fitness for any purpose of the new equipment. The Manufacturer disclaims all liability for incidental or consequential damages.

This S-Series Sprayer is subject to design changes and Fast Ag Solutions shall not be required to retrofit or exchange items on previously sold units except at its own option.

Warranty void if not registered.

FAST
S-SERIES SPRAYER

Warranty Registration

This form must be filled out by the dealer and signed by both the dealer and the customer at the time of delivery.

Customer Name					
Address					
City		State		Zip	
Phone					

Dealer Name					
Address					
City		State		Zip	

Sprayer Model	
Serial Number	
Delivery Date	

Warranty Inspection Report

DEALER INSPECTION REPORT

____All Fasteners Tight
____Wheel Bolts Torqued
____Hydraulic Hoses and Fittings Free and Tight
____Fertilizer Hoses and Fittings Free and Tight
____Wheel Drive Turns Freely
____Lubricate Machine
____Check Tire Pressure
____Frame and Wings Level
____Monitors and Controllers Function
____Wiring Harness Connected

SAFETY

____ Safety Chain Installed
____ All Guards Installed
____ All Safety Signs Installed
____ Reflectors, SMV, and Lights Clean
____ Review Operating and
____ Safety Instructions

I have thoroughly instructed the buyer on the above-described equipment which review included the Operator's Manual content, equipment care, adjustments, safe operation, and applicable warranty policy.

Date_____
Dealer's Rep. Signature_____

The above equipment and Operator's Manual have been received by me, and I have been thoroughly instructed as to care, adjustments, safe operation, and applicable warranty policy.

Date_____
Owner's Signature_____

White - FAST
Yellow - Dealer
Pink – Customer

FAST 3200 Gal. Series Sprayer

SPRAYER SERIAL NUMBER _____

DATE PURCHASED _____/_____/_____

TANK SIZE (CIRCLE ONE) **3200 Gal.**

BOOM WIDTH (CIRCLE ONE) **120 ft.** **132 ft.** **135 ft.**

NOZZLE SPACING (CIRCLE ONE) **15 in.** **20 in.** **22 in.**

BOOM TYPE (CIRCLE ONE) **TRUSS** **CAMERA-READY**

PUMP MANUFACTURER:

(CIRCLE ONE)

ACE 255F-304 WET SEAL **ACE 255F-304 PWM WET SEAL**

ACE FMC-750-HYD OASIS **ACE FMC-750 OASIS PWM**

General Information

All rights, especially copying and distribution rights, are reserved. No part of this publication may be reproduced in any form or by any means, electronic or mechanical, including photocopying, without express written permission from Fast Ag Solutions.

Parts information in this manual represents components installed when product was manufactured based upon the best available information. Modifications made subsequent to initial delivery are not included. Always verify the parts and color required when ordering parts.

If you have any questions, please contact your Fast Ag Solutions Parts and Service Department.

Explanation of Parts Lists

The parts list is organized as follows:

Table of Contents

TRAILER & FRAME

STEERABLE HITCH

TRAILER AXLES, TIRES, & TRACKS

BOOM & TOUCHDOWN WHEELS

TANK & PUMP

PRODUCT PLUMBING on BOOM

PRODUCT PLUMBING on FRAME

PRODUCT ELECTRICAL COMP.S

HYDRAULICS

CAB BOX ELECTRICAL

LIGHTS, DECALS, & TAGS

The parts lists are broken down into sub-assemblies and listed in four (4) columns:

- **ITEM** - These numbers are found on the illustration associated with the parts list.
  - NS - This item is NOT SHOWN, included for reference.
- **QTY**. - This is the quantity of parts needed in an assembly.
  - AR - The quantity of this item is applied AS REQUIRED for the location.
- **PART NO**. - These are the part numbers associated with the ITEM.
- **DESCRIPTION** - This is the description of the part.

Table of Contents

Section **Page**

Warranty Registration *4*

Warranty Inspection Report *4*

General Information *6*

Table of Contents **7**

TRAILER & FRAME **16**

Base Trailer - 3200 Gal. *16*
Parts List 36600: Base Trailer - 3200 Gal. 17

Hitch Tongue *18*
Parts List 36604: Hitch Tongue 19

Integrated Toolbox *20*
Parts List 36770: Integrated Toolbox 21

Operator Platform Ladder (for Truss Boom) *22*
Parts List 36613: Operator Platform Ladder (for Truss Boom) 23

Operator Platform Ladder (for Camera-Ready Boom) *25*
Parts List 36875: Operator Platform Ladder (for Camera-Ready Boom) 27

Boom Rests (for Truss Boom) *28*
Parts List 36606: Boom Rests (for Truss Boom) 29

Boom Rests (for Camera-Ready Boom) *30*
Parts List 36860: Boom Rests (for Camera-Ready Boom) 31

Eductor Lift – 15 Gal. *32*
Parts List 34300: Eductor Lift – 15 Gal. 33

STEERABLE HITCH **34**

Steerable Hitch Option *34*
Parts List 36681: Steerable Hitch Option 35

Steerable Hitch Node Mount *36*
Parts List 36682: Steerable Hitch Node Mount 36

Steerable Hitch Hydraulic Block *37*
Parts List 36685: Steerable Hitch Hydraulic Block 37

Steerable Hitch Rotation Sensor *38*
Parts List 36684: Steerable Hitch Rotation Sensor 39

Steerable Hitch Hillside Compensator, Tracks *40*
Parts List 28175: Steerable Hitch Hillside Compensator, Tracks 41

Steerable Hitch Reverse Detection Sensors *42*
Parts List 28200: Steerable Hitch Reverse Detection Sensors 42

Steerable Hitch Ready Option *43*
Parts List 36680: Steerable Hitch Ready Option 43

Steerable Hitch Ready Links.....44
Parts List 35850: Steerable Hitch Ready Links.....44

Steerable Hitch Locking Turnbuckle.....45
Parts List 35705: Steerable Hitch Locking Turnbuckle.....45

TRAILER AXLES, TIRES, & TRACKS.....47

Adjustable Track Axle, 80”- 144”.....48
Parts List 26742 / 26743 / 27939 / 27947 / 28235: Adjustable Track Axle, 80”- 144”.....49

BOOM & TOUCHDOWN WHEELS.....51

Truss Boom 120’ / 132’.....52
Parts List 36700 / 36750: Truss Boom 120’ / 132’.....53

Truss Boom Center Section with Hinges.....54
Parts List 36699: Truss Boom Center Section with Hinges.....55
Parts List 36699: Truss Boom Center Section with Hinges.....57
Parts List 36699: Truss Boom Center Section with Hinges.....58
Parts List 36699: Truss Boom Center Section with Hinges.....59

Truss Boom Inner Center to P-Link.....60
Parts List 36712: Truss Boom Inner Center to P-Link.....61

Cradle Centering Spring Assembly.....62
Parts List 28360: Cradle Centering Spring Assembly.....62

Truss Boom 120’ / 132’ Wing.....64
Parts List 36705 / 36755: Truss Boom 120’ / 132’ Wing.....66

Truss Boom 120’ / 132’ Wing 1.....68
Parts List 36701 / 36751: Truss Boom 120’ / 132’ Wing 1.....69

Truss Boom 120’ / 132’ Wing 2.....70
Parts List 36702: Truss Boom 120’ / 132’ Wing 2.....71

Truss Boom 120’ / 132’ Wing 3.....72
Parts List 36703 / 36753: Truss Boom 120’ / 132’ Wing 3.....73

Truss Boom 120’ Wing 4.....74
Parts List 36704: Truss Boom 120’ Wing 4.....75

Truss Boom 132’ Wing 4.....76
Parts List 36754: Truss Boom 132’ Wing 4.....77

Boom Routing Swiveling Hose Clamp.....78
Parts List 37532: Boom Routing Swiveling Hose Clamp.....78

Boom P-Links & Accumulator.....80
Parts List 36706: Boom P-Links & Accumulator.....81

Truss Boom 120’ Touchdown Wheel Option.....82
Parts List 99RAUG120WHLKT: Truss Boom 120’ Touchdown Wheel Option.....82

Truss Boom 132’ Touchdown Wheel Option.....83
Parts List 99RAUG132WHLKT: Truss Boom 132’ Touchdown Wheel Option.....83

Touchdown Wheel.....84
Parts List 34921: Touchdown Wheel.....84

Hub Assembly, Machined to Fit *85*
Parts List 36278: Hub Assembly, Machined to Fit 85

Truss Boom 60' / 66' Extension Option *86*
Parts List 99120TB60WGOP20T / 99132TB66WGOP: Truss Boom 60' / 66' Extension Option 87

XRT AutoBoom *90*
Parts List 36709: XRT AutoBoom 91
Parts List 36709: XRT AutoBoom 92
Parts List 36709: XRT AutoBoom 93
Parts List 36709: XRT AutoBoom 94
Parts List 36709: XRT AutoBoom 95

XRT AutoBoom +2 Sensor Option *96*
Parts List 36710: XRT AutoBoom +2 Sensor Option 96

XRT Rotation Sensor *97*
Parts List 21495-1 / 22955-1 / 28853-1: XRT Rotation Sensor 97

TANK & PUMP 99

Main, Rinse, and Handwash Tank *99*
Parts List 36166 / 36167: Main, Rinse, and Handwash Tank 101

3200 Gal. Tank with Fittings *102*
Parts List 36160 / 36165: 3200 Gal. Tank with Fittings 103

Tank Lid Baffle *104*
Parts List 38390: Tank Lid Baffle 104

Tank Vented Overflow Fitting *105*
Parts List 90SAFCOV: Tank Vented Overflow Fitting 105

Tank Agitation Fittings *105*
Parts List 90SALTRUMPET / 90SASHORTTRUMPET: Tank Agitation Fittings 105

Rinse Ball Assembly, 90° Elbow *106*
Parts List 90SARNSEBALLASY: Rinse Ball Assembly, 90 Elbow 106

Rinse Ball Assembly, Tee *106*
Parts List 90SARNSEBALLASYT: Rinse Ball Assembly, Tee 106

Rinse Tank *107*
Parts List 570003TNK / 570004TNK: Rinse Tank 107

Eductor Tank – 15 Gal. *108*
Parts List 36196 / 36297: Eductor Tank – 15 Gal. 108

Pump Non-PWM (ACE 255F-304 WET SEAL or ACE FMC-750-HYD OASIS) *110*
Parts List 36200 / 36202: Pump Non-PWM (ACE 255F-304 WET SEAL or ACE FMC-750-HYD OASIS) 111

Pump PWM (ACE 255F-304 PWM WET SEAL or ACE FMC-750-HYD PWM OASIS) *112*
Parts List 36199 / 36201: Pump PWM (ACE 255F-304 PWM WET SEAL or ACE FMC-750-HYD PWM OASIS) 113

Pump Breakdown *114*

PRODUCT PLUMBING on BOOM 116

Plumbing Schematic (830018) *116*

Standard Nozzles *117*

Parts List: Standard Nozzles 117

Wet Boom Plumbing, Section Overview 118
06-Section Spacing 118
10-Section Spacing 119

Wet Boom Plumbing – Center – Common Items, 120' / 132' 120
Parts List, Center: Wet Boom Plumbing – Center – Common Items, 120' / 132' 121

Wet Boom Plumbing – Center – Section Items, 120' / 132' 122
Parts List, Center: Wet Boom Plumbing – Center – Section Items, 120' / 132' 123

Wet Boom Plumbing – Wing 1 – Common Items, 120' / 132' 124
Parts List, Wing 1: Wet Boom Plumbing – Wing 1 – Common Items, 120' / 132' 125

Wet Boom Plumbing – Wing 2 – Common Items, 120' / 132' 126
Parts List, Wing 2: Wet Boom Plumbing – Wing 2 – Common Items, 120' / 132' 127

Wet Boom Plumbing – Wing 3 – Common Items, 120' 128
Parts List, Wing 3: Wet Boom Plumbing – Wing 3 – Common Items, 120' 129

Wet Boom Plumbing – Wing 4 – Common Items 130
Parts List, Wing 4: Wet Boom Plumbing – Wing 4 – Common Items 131

Wet Boom Plumbing – Wing 1 – 06 Section, 120' 132
Parts List, Wing 1: Wet Boom Plumbing – Wing 1 – 06 Section, 120' 133

Wet Boom Plumbing – Wing 2 – 06 Section, 120' 134
Parts List, Wing 2: Wet Boom Plumbing – Wing 2 – 06 Section, 120' 135

Wet Boom Plumbing – Wing 3 – 06 Section, 120' 136
Parts List, Wing 3: Wet Boom Plumbing – Wing 3 – 06 Section, 120' 137

Wet Boom Plumbing – Wing 4 – 06 Section, 120' 138
Parts List, Wing 4: Wet Boom Plumbing – Wing 4 – 06 Section, 120' 139

Wet Boom Plumbing – Wing 1 – 10 Section, 120' 140
Parts List, Wing 1: Wet Boom Plumbing – Wing 1 – 10 Section, 120' 141

Wet Boom Plumbing – Wing 2 – 10 Section, 120' 142
Parts List, Wing 2: Wet Boom Plumbing – Wing 2 – 10 Section, 120' 143

Wet Boom Plumbing – Wing 3 – 10 Section, 120' 144
Parts List, Wing 3: Wet Boom Plumbing – Wing 3 – 10 Section, 120' 145

Wet Boom Plumbing – Wing 4 – 10 Section, 120' 146
Parts List, Wing 4: Wet Boom Plumbing – Wing 4 – 10 Section, 120' 147

Wet Boom Plumbing – Wing 1 – 132' 148
Parts List, Wing 1: Wet Boom Plumbing – Wing 1 – 132' 149

Wet Boom Plumbing – Wing 2 –132' 150
Parts List, Wing 2: Wet Boom Plumbing – Wing 2 –132' 151

Wet Boom Plumbing – Wing 3 – 132' 152
Parts List, Wing 3: Wet Boom Plumbing – Wing 3 – 132' 153

Wet Boom Plumbing – Wing 4 – 132' 154
Parts List, Wing 4: Wet Boom Plumbing – Wing 4 – 132' 155

Boom Section Distribution – 06 Section TeeJet 156
Parts List 36327-A / 36328-A: Boom Section Distribution – 06 Section Teejet 156

Boom Section Distribution – 10 Section TeeJet *157*
Parts List 36204-A / 36205-A: Boom Section Distribution – 10 Section TeeJet 157

Boom Section Distribution – 06-10 Section KZ-Co *158*
Parts List 36204 / 36205 / 36327 / 36328: Boom Section Distribution – 06-10 Section KZ-Co 159

Filter / Strainer at Boom *160*
Parts List 530473: Filter / Strainer at Boom 160

Hose Barb Reducer, 1” to 3/4” ID *161*
Parts List 90SA075100HBST: Hose Barb Reducer, 1” to 3/4” ID 161

Hose Barb U-Fitting *161*
Parts List 90SAU / 90SAU075: Hose Barb U-Fitting 161

Boom Clean Out *162*
Parts List 90SABC: Boom Clean Out 162

Side Fold Fitting for 60’ Extension *162*
Parts List 90SA6080SF: Side Fold Fitting for 60’ Extension 162

Valved Tee *163*
Parts List 90SAVUF: Valved Tee 163

Recirculation Tee, One Valve *164*
Parts List 90SAVRJ: Recirculation Tee, One Valve 164

Recirculation Tee, Two Valve *165*
Parts List 90SAVRT2: Recirculation Tee, Two Valve 165

End of Hose Plug *165*
Parts List 90SAPLUG: End of Hose Plug 165

Hose Barb Tee, 1” to 3/4” *166*
Parts List 90SAFTG100T07590: Hose Barb Tee, 1” to 3/4” 166

Hose Barb H, 1” to 3/4” *166*
Parts List 90SAFTG100T075T: Hose Barb H, 1” to 3/4” 166

Fenceline Nozzles – Manual *167*
Parts List 99EPFLN00: Fenceline Nozzles – Manual 167

Fenceline Nozzles – Electric One Side *168*
Parts List 36723 / 36724 / 36725: Fenceline Nozzles – Electric One Side 169

Fenceline Nozzles – Electric Two Sides *170*
Parts List 36726 / 36727 / 36728: Fenceline Nozzles – Electric Two Sides 170

Recirculation Re-entry *171*
Parts List 36209: Recirculation Re-entry 171

PRODUCT PLUMBING on FRAME 173

Plumbing Schematic (830018) *173*

Plumbing Overview (36601) *174*

Main Tank Quick Fill *175*
Parts List 36601: Main Tank Quick Fill 175

Quick Fill Valve, 3” *176*
Parts List 90SA3QF: Quick Fill Valve, 3” 176

Main Tank Sump & Pump Selector Valve *177*
Parts List 36601: Main Tank Sump & Pump Selector Valve 177

3-Way Electric Selector Valve Breakdown (500080) *178*

Pump, Filter, and Sending *180*
Parts List 36601: Pump, Filter, and Sending 181

Filter / Strainer at Pump *182*
Parts List 530125: Filter / Strainer at Pump 182

Distribution, Agitation & Rinse *183*
Parts List 36630: Distribution, Agitation & Rinse 183

Distribution Electric Shutoff Valve *184*
Parts List 500064: Distribution Electric Shutoff Valve 185

Standard Flowmeter *186*
Parts List 36601: Standard Flowmeter 186

Standard Flowmeter Breakdown *188*
Parts List 520059: Standard Flowmeter Breakdown 189

High Flow Option, 2” *190*
Parts List 36602: High Flow Option, 2” 190

High Flow Flowmeter Breakdown *191*
Parts List 632125: High Flow Flowmeter Breakdown 191

Agitation Hose & Fittings *192*
Parts List 36601: Agitation Hose & Fittings 193

Rinse Hose & Fittings *194*
Parts List 36601: Rinse Hose & Fittings 195

Rinse Tank Quick Fill *196*
Parts List 36601: Rinse Tank Quick Fill 196

Quick Fill Valve, 2” *197*
Parts List 90SARTQF: Quick Fill Valve, 2” 197

Pressure Gauges & Sensing *198*
Parts List 36601: Pressure Gauges & Sensing 198

Pressure Gauge *199*
Parts List 90SAFPGA: Pressure Gauge 199

Eductor Supply and Hillside Pressure Compensation *200*
Parts List 36601: Eductor Supply and Hillside Pressure Compensation 200

Eductor Option – 15 Gal. *201*
Parts List 34400: Eductor Option – 15 Gal. 203

Distribution Bank End Takeoff *204*
Parts List 90SARAE2: Distribution Bank End Takeoff 204

Eductor Base, 2.0 FPT *205*
Parts List 36195: Eductor Base, 2.0 FPT 205

Eductor Option – None *206*
Parts List 36687: Eductor Option – None 206

Main Tank Discharge *207*

Parts List 36601: Main Tank Discharge 207

Hand Wash Hose & Fittings *208*
Parts List 36601: Hand Wash Hose & Fittings 208

Hand Wash Rinse Faucet *209*
Parts List 90SARNSEFAUCET90: Hand Wash Rinse Faucet 209

Sight Gauge (for Truss Boom), Manual – 3200 Gal. *210*
Parts List 36629: Sight Gauge (for Truss Boom), Manual – 3200 Gal. 211

Sight Gauge (for Camera-Ready Boom), Manual – 3200 Gal. *212*
Parts List 36820: Sight Gauge (for Camera-Ready Boom), Manual – 3200 Gal. 213

Sight Gauge, Electric, Mueller *214*
Parts List 99SGAE3200FS: Sight Gauge, Electric, Mueller 214

Sight Gauge, Electric, Rota *215*
Parts List 37976: Sight Gauge, Electric, Rota 215

PRODUCT ELECTRICAL COMP.S 216

3-Way Electric Selector Valve *216*
Parts List 99FSEVO: 3-Way Electric Selector Valve 217

3-Way Electric Selector Schematic (500080) *218*

Fenceline Nozzles – Single, Display Control *219*
Parts List 27360: Fenceline Nozzles – Single, Display Control 219

Fenceline Nozzles – Single, Toggle Switch Control *220*
Parts List 27362: Fenceline Nozzles – Single, Toggle Switch Control 220

Fenceline Nozzles – Dual, Display Control *221*
Parts List 27361: Fenceline Nozzles – Dual, Display Control 221

Fenceline Nozzles – Dual, Toggle Switch Control *222*
Parts List 27363: Fenceline Nozzles – Dual, Toggle Switch Control 222

Raven Harnesses & Components *223*
Parts List: Raven Harnesses & Components 224

Control Harness 115-0171-085 ..... *225*

Control Harness 115-0159-856 ..... *226*

Control Harness 115-0171-086 ..... *227*

Raven RCM Rate Controller *228*
Parts List 36739 / 36729: Raven RCM Rate Controller 229

John Deere RC2000 Rate Controller *230*
Parts List 47PCSJDRC6BTB / 47PCSJDRC10BTB: John Deere RC2000 Rate Controller 230

John Deere Greenstar Rate Controller *232*
Parts List 36730 / 36738: John Deere Greenstar Rate Controller 233

Capstan Controller *234*
Parts List 36731: Capstan Controller 234

Capstan Kits *235*
Parts List 632181 / 632183 / 632184: Capstan Kits 235

Customer-Supplied Raven or John Deere RC2000 ..... *236*
Parts List 35741: Customer-Supplied Raven or John Deere RC2000 236

Customer-Supplied John Deere Greenstar *237*
Parts List 35404 / 35744: Customer-Supplied John Deere Greenstar 237

Customer-Supplied Other 37-Pin *238*
Parts List 631980: Customer-Supplied Other 37-Pin 238

HYDRAULICS 239

Hydraulic Diagram, Truss Boom (830017) *239*

Boom Hydraulic Hoses & Fittings *240*
Parts List 600135: Boom Hydraulic Hoses & Fittings 242

Boom Center Hydraulic Block & Fittings *243*
Parts List 36711: Boom Center Hydraulic Block & Fittings 243

Boom Center Hydraulic Block Connections (631943) *244*

Boom Center Hydraulic Block Breakdown *246*
Parts List 631943: Boom Center Hydraulic Block Breakdown 247

Boom Center Grease Hoses & Fittings *248*
Parts List 600131: Boom Center Grease Hoses & Fittings 248

Product Pump (PWM) Hydraulic Hose & Fittings *249*
Parts List 600136: Product Pump (PWM) Hydraulic Hose & Fittings 249

Product Pump (Non-PWM) Hydraulic Hose & Fittings *250*
Parts List 600137: Product Pump (Non-PWM) Hydraulic Hose & Fittings 250

Steerable Hitch Hoses & Fittings *251*
Parts List 600138: Steerable Hitch Hoses & Fittings 251

Steerable Hitch Hydraulic Block Base *252*
Parts List 632021: Steerable Hitch Hydraulic Block Base 252

Standard Grease Skip Row Duals Hose Kit *253*
Parts List 600143: Standard Grease Skip Row Duals Hose Kit 253

CAB BOX ELECTRICAL 254

Cab Fold Box *254*
Parts List 632207: Cab Fold Box 255

Cab Agitation & Rinse Box *256*
Parts List 632155: Cab Agitation & Rinse Box 257

Cab Agitation & Rinse Box Harness *258*
Parts List 632156: Cab Agitation & Rinse Box Harness 259

Cab Display, Raven CR7 ..... *260*
Parts List 9920RACR7ISOPH / 9920RACR7ISOPHJD / 9920RACR7ISOH: Cab Display, Raven CR7 260

LIGHTS, DECALS, & TAGS 261

Night Light Schematic (830020) *261*

Blue Lights (for Truss Boom) *262*
Parts List 28750 / 39698: Blue Lights (for Truss Boom) 263

Road Light Harness.....264
Parts List 740086 / 740092: Road Light Harness.....265

Plumbing and Operator Platform Decals.....266
Parts List 36601: Plumbing and Operator Platform Decals.....266

Slow-Moving-Vehicle Sign Assembly.....267
Parts List 90SASMVWOSIS: Slow-Moving-Vehicle Sign Assembly.....267

Speed Decal.....268
Parts List: Speed Decal.....268

TRAILER & FRAME

Base Trailer - 3200 Gal.

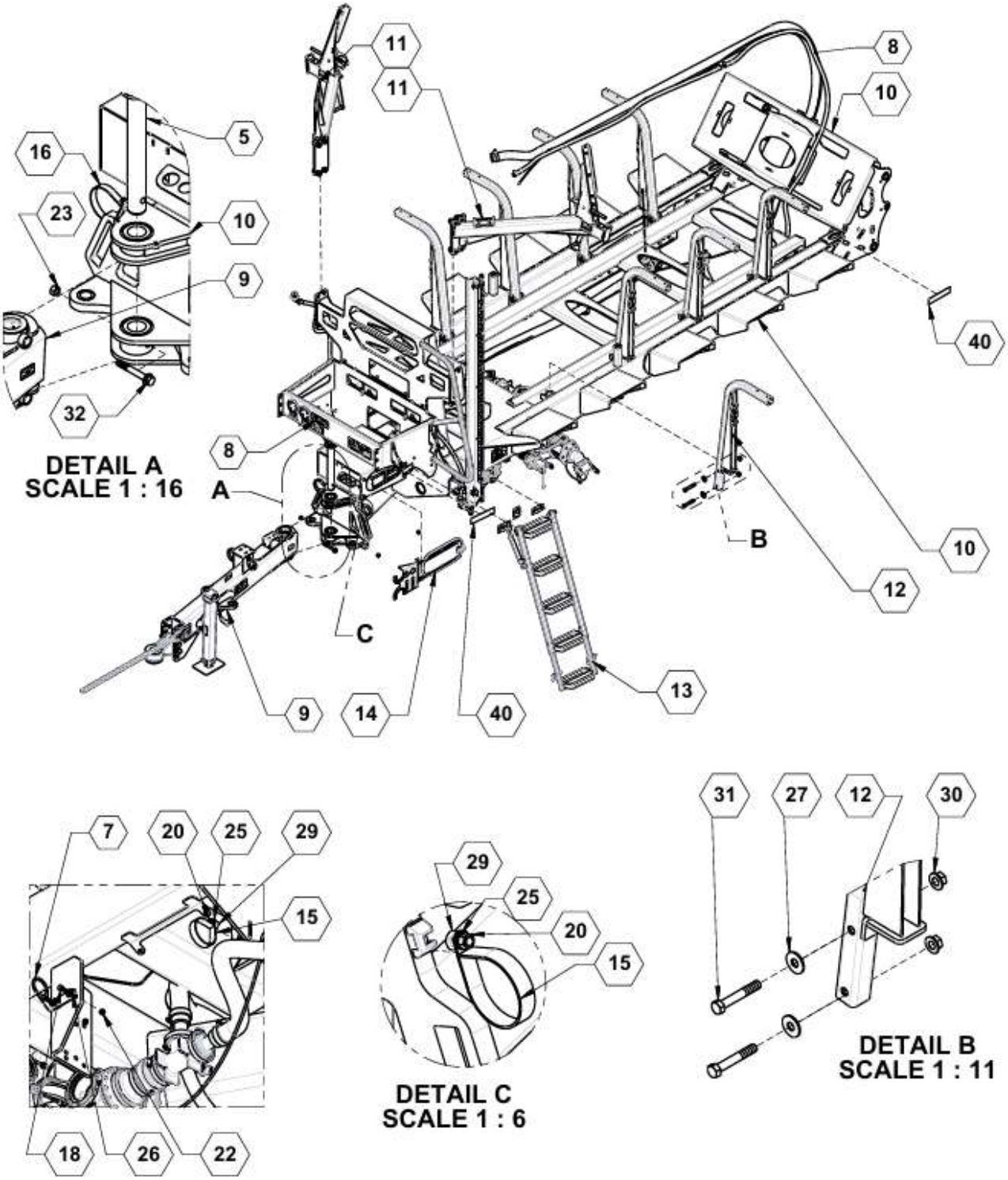

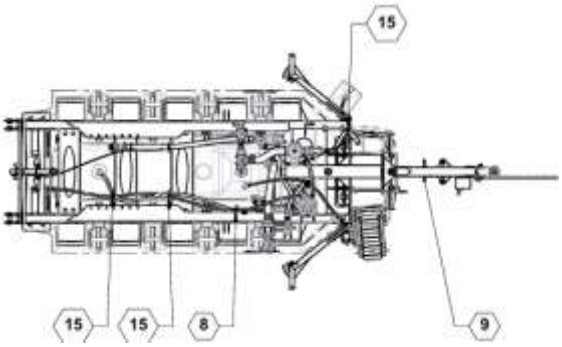

Parts List 36600: Base Trailer - 3200 Gal.

ITEM	PART NO.	QTY.	DESCRIPTION
5	**26056**	1	PIN WLDMT, STEERABLE HITCH
7	**35224**	1	BRACKET, 47 PIN HARNESS
8	**36601**	1	ASSEMBLY, TRAILER PLUMBING
9	**36604**	1	ASSEMBLY, HITCH TONGUE
10	**36605**	1	CART, LARGE STEER READY
11	**36606**	1	ASSEMBLY, BOOM RESTS
12	**36609**	8	WELDMENT, COOTY ARM TANK SUPPORT
13	**36613**	1	ASSEMBLY, LADDER EXTENDED
14	**36770**	1	ASSY, INTEGRATED TOOL-SPACE
15	**540052**	5	P-CLAMP, 3" W/3/8" HOLE
16	**540053**	1	P-CLAMP, 4" W/3/8" HOLE
18	**596115M**	2	NUT, CENTERLOCK, 5/8-11 MAGNI
20	**596213M**	6	NUT, HEX 3/8-16 MAGNI
22	**596236M**	2	NUT, CENTERLOCK, 5/16-18 MAGNI
23	**596240M**	1	NUT, CENTERLOCK, 5/8-11 MAGNI
25	**596250M**	6	LOCKWASHER, 3/8 MAGNI
26	**596257M**	2	WASHER, FLAT 5/16 USS MAGNI
27	**596261M**	16	WASHER, FLAT 5/8 MAGNI
28	**596327M**	3	BOLT, HH 3/8-16 X 1 GR8 MAGNI
29	**596592M**	3	BOLT, CARRIAGE 3/8-16 X 1 MAGNI
30	**596742M**	16	NUT, TOP LOCK FLANGE 5/8-11 MAGNI
31	**596800M**	16	BOLT, HH 5/8-11 X 4 GR8 MAGNI
32	**596858M**	1	BOLT, FLANGE 5/8 -11 X 4-1/2" GR 8 MAGNI
34	**740086**	1	WIRING HRNS LGT SPRAYER
40	**800110**	4	DECAL, AMBER, REFLECTOR

Hitch Tongue

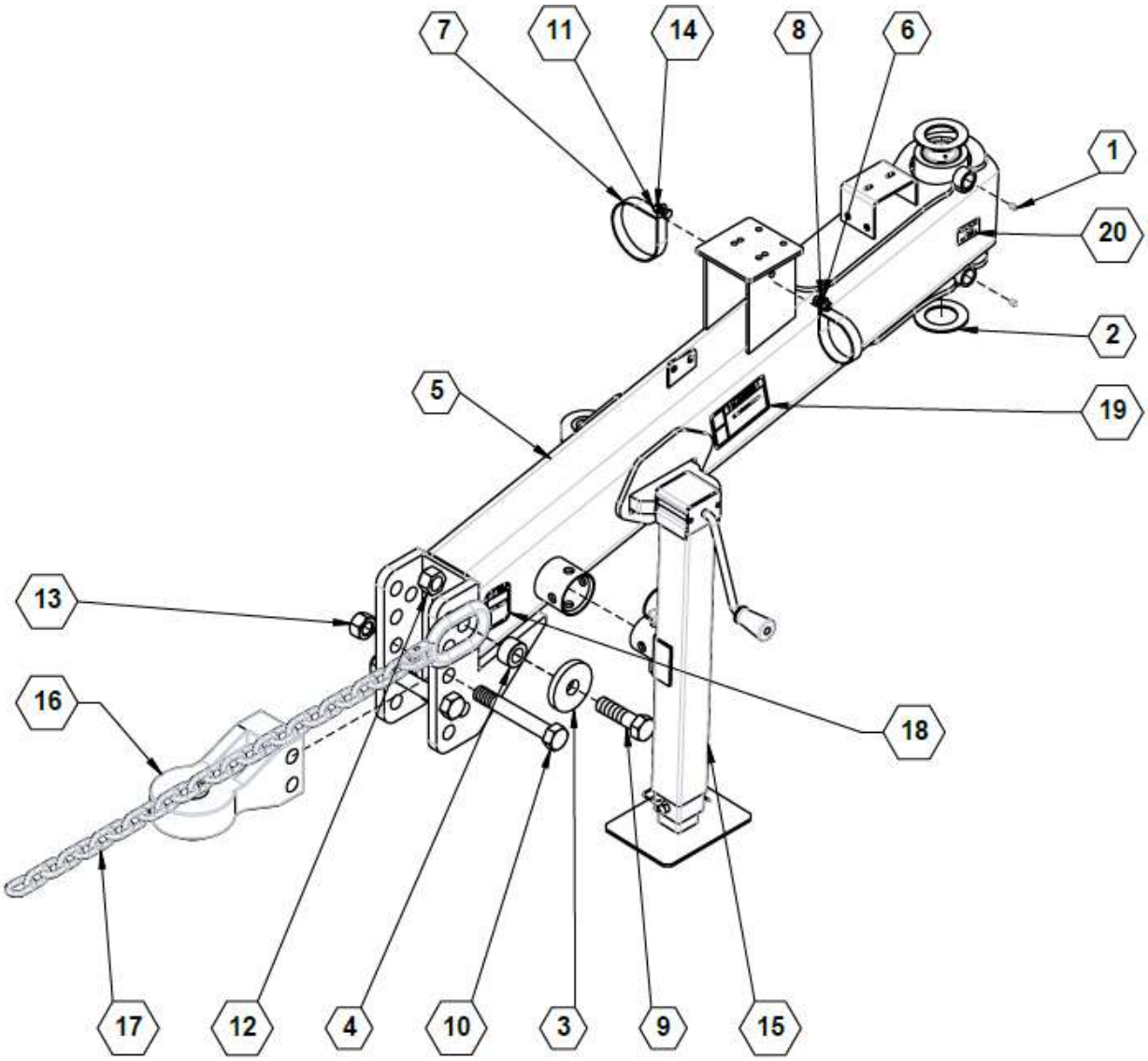

Parts List 36604: Hitch Tongue

ITEM	PART NO.	QTY.	DESCRIPTION
1	**759**	2	ZERK, 1/4-28 STRAIGHT PIPE THREAD
2	**15277**	2	WASHER, STAINLESS STEEL
3	**15829**	1	WASHER PLATE, SAFETY CHAIN
4	**15835**	1	BUSHING, SAFETY CHAIN SPACER
5	**26060**	1	WLDMNT, TONGUE
6	**540052**	1	P-CLAMP, 3" W/3/8" HOLE
7	**540053**	1	P-CLAMP, 4" W/3/8" HOLE
8	**596128M**	2	BOLT, HH 3/8-16 X 1 GR5 MAGNI
9	**596201M**	1	BOLT, HEX 1-8 X 3-1/2 GR5 MAGNI
10	**596208M**	2	BOLT, HH 1-8X6-3/4 GR5 MAGNI
11	**596213M**	2	NUT, HEX 3/8-16 MAGNI
12	**596234M**	1	NUT, HEX NYLOCK 1-8 MAGNI
13	**596242M**	2	NUT, CENTERLOCK, 1" MAGNI
14	**596250M**	2	LOCKWASHER, 3/8 MAGNI
15	**790005**	1	JACK, 8000#
16	**790040**	1	HITCH CAT 4 BLACK ARTICULATING
17	**790050**	1	SAFETY CHAIN, 30,000 LB
18	**800005**	1	DECAL, WARNING UPENDING HAZARD
19	**800013**	1	DECAL, DANGER CRUSHING HAZARD
20	**800287**	1	DECAL, GREASE PIVOT POINTS

Integrated Toolbox

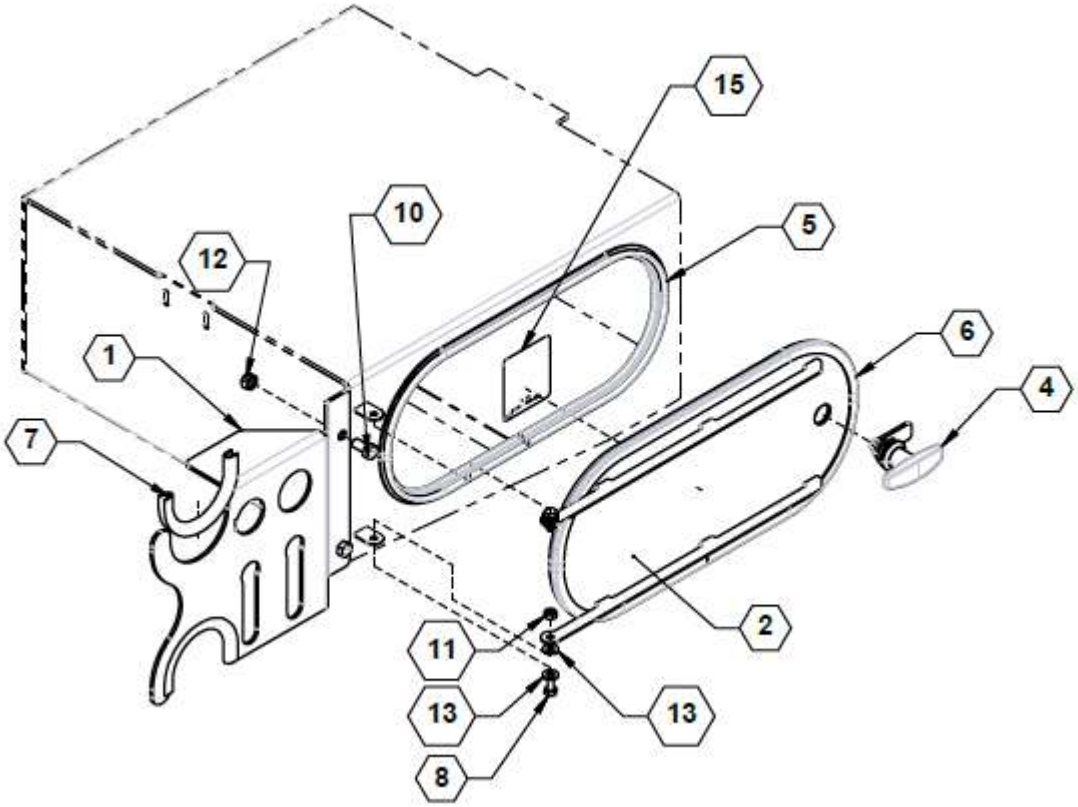

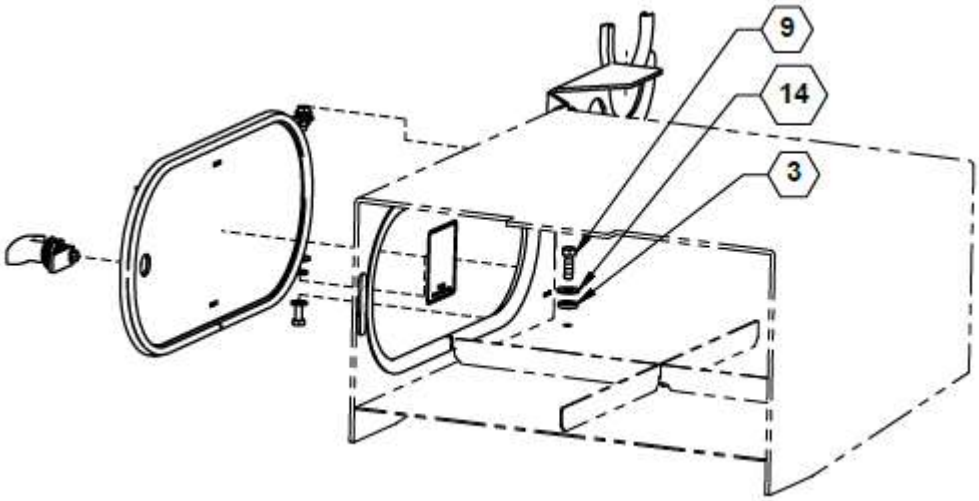

Parts List 36770: Integrated Toolbox

ITEM	PART NO.	QTY.	DESCRIPTION
1	**36298**	1	PLATE, TONGUE CONNECT STORAGE
2	**36760**	1	WELDMENT, TOOLBOX DOOR
3	**520016**	1	GASKET, QUICK TEEJET SEAT, STD EPDM
4	**540090**	1	T-HANDLE, QTR TURN, CHRM ZINC
5	**540107**	42	(IN) BULB SEAL, FOR 7-GA
6	**540110**	45	(IN) BULB SEAL, FOR 10-GA
7	**590459**	1	(FT) TRIM, EDGE GUARD, 1/4"
8	**596101M**	2	BOLT, HH 1/4-20 X 3/4 GR5 MAGNI
9	**596115M**	1	BOLT, HH 5/16-18 X 1 GR5 MAGNI
10	**596818M**	2	BOLT, HH 3/8-16 x 3/4" GR5 MAGNI
11	**596235M**	2	NUT, CENTERLOCK, 1/4-20 MAGNI
12	**596237M**	2	NUT, CENTERLOCK 3/8-16 MAGNI
13	**596256M**	4	WASHER, FLAT 1/4 USS MAGNI
14	**596257M**	1	WASHER, FLAT 5/16 USS MAGNI
15	**800381**	1	DECAL, RESOURCES PAGE

Operator Platform Ladder (for Truss Boom)

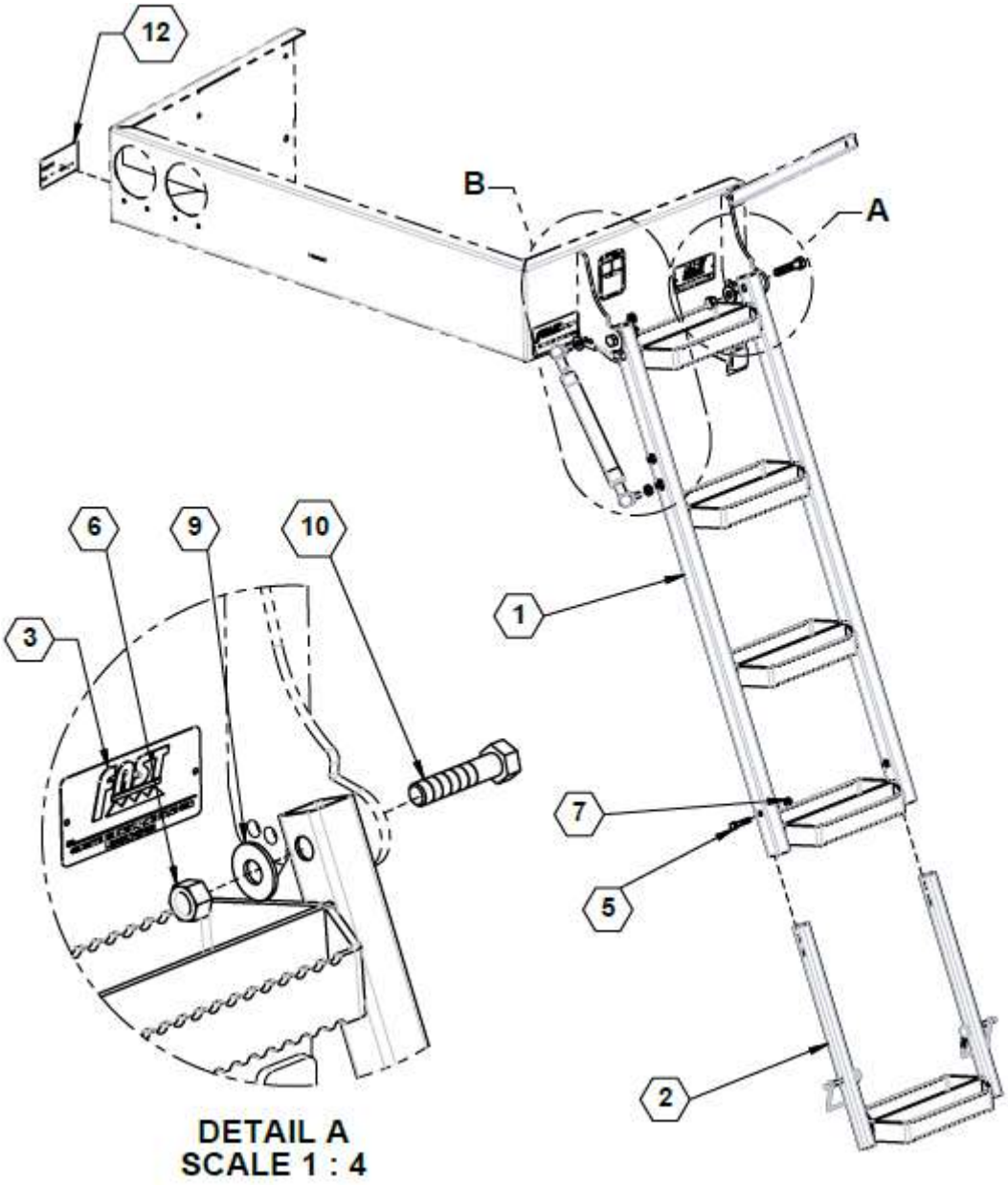

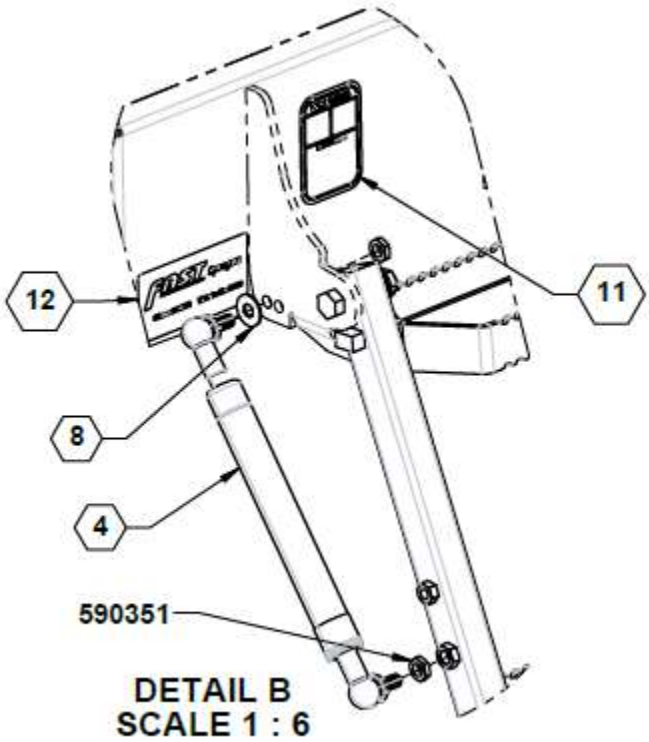

Parts List 36613: Operator Platform Ladder (for Truss Boom)

ITEM	PART NO.	QTY.	DESCRIPTION
1	**10620**	1	LADDER WLDMT, 4 STEP
2	**35250**	1	LADDER EXTENSION ASSEMBLY
3	**590216**	1	FAST SERIAL TAG
4	**590461**	1	SHOCK, GAS, 90LB, LADDER
5	**596116M**	2	BOLT, HH 5/16-18 X 1-1/2 GR5 MAGNI
6	**596231M**	2	NUT, HEX NYLOCK 1/2-13 MAGNI
7	**596236M**	2	NUT, CENTERLOCK, 5/16-18 MAGNI
8	**596260M**	2	WASHER, FLAT 1/2 MAGNI
9	**596638M**	2	BOLT, HH 1/2-13 X 2-1/4 GR5 MAGNI
10	**800003**	1	DECAL, WARNING FALLING HAZARD
11	**800021**	2	FAST LOCATION DECAL

Operator Platform Ladder (for Camera-Ready Boom)

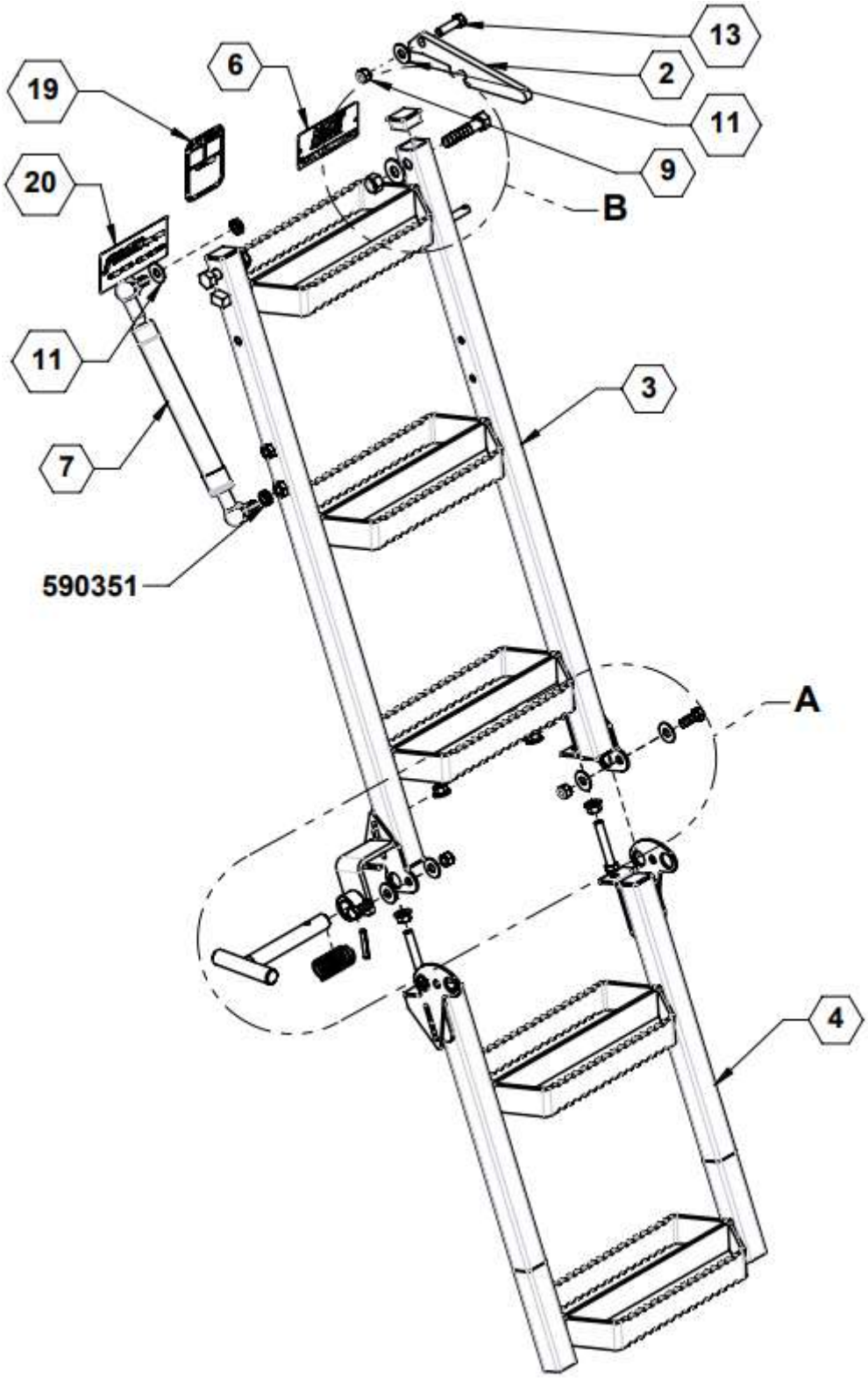

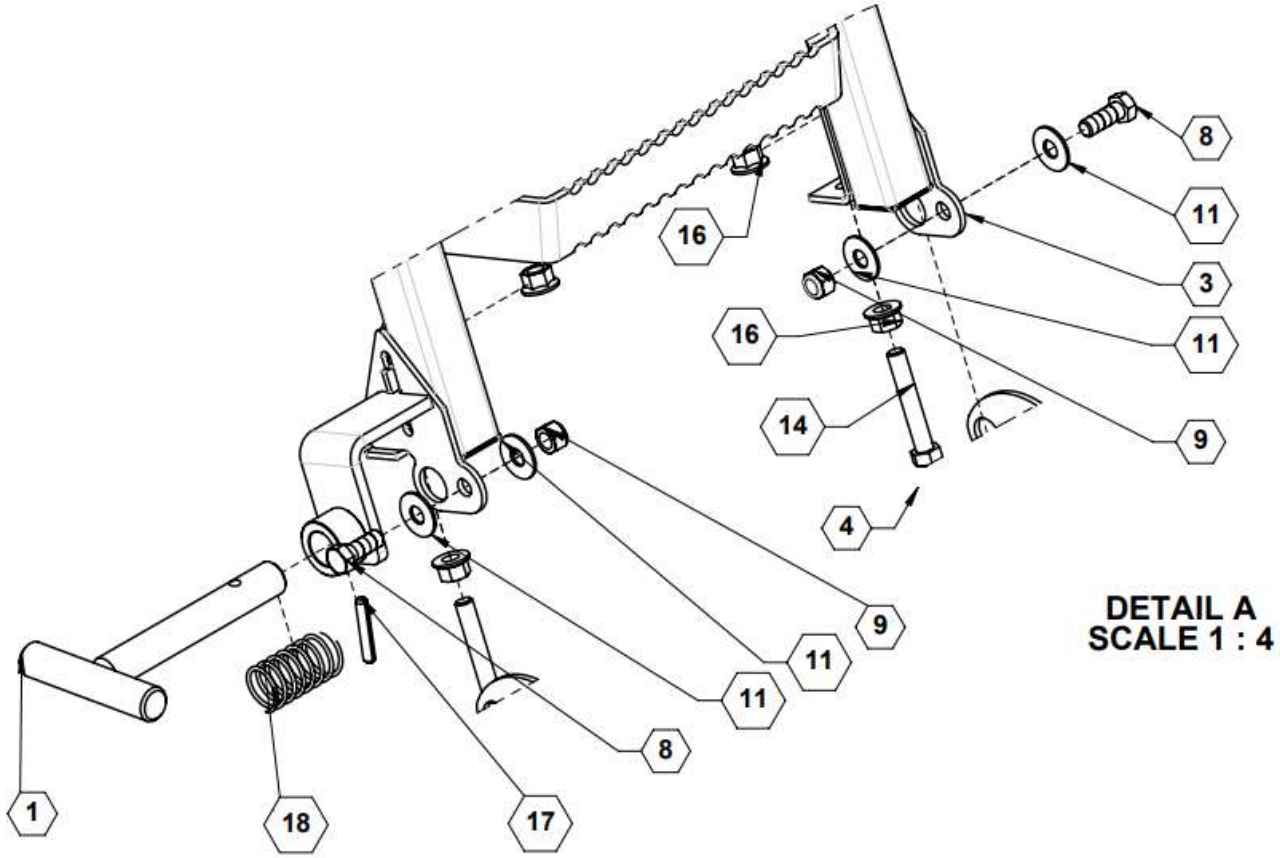

DETAIL A
SCALE 1 : 4

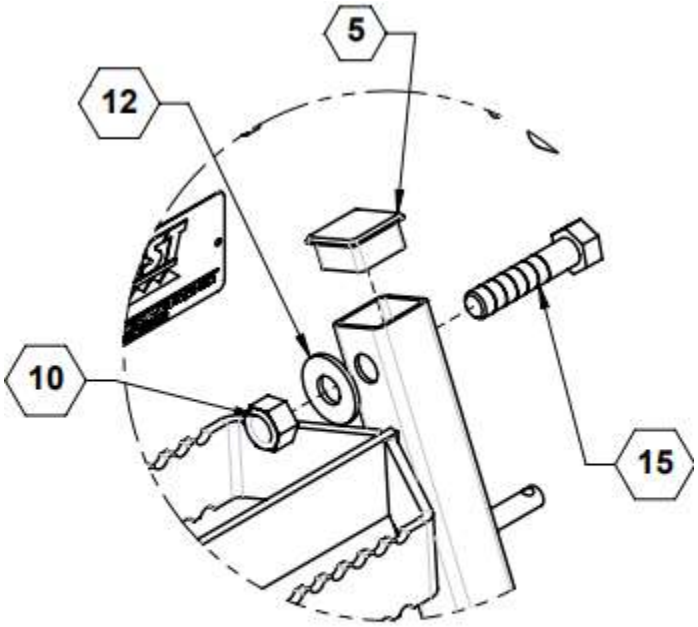

DETAIL B
SCALE 1 : 4

Parts List 36875: Operator Platform Ladder (for Camera-Ready Boom)

ITEM	PART NO.	QTY.	DESCRIPTION
1	**7981**	1	TRANSPORT LOCK PIN
2	**36868**	1	PLATE, LADDER UP LOCK
3	**36880**	1	WELDMENT, UPPER LADDER
4	**36885**	1	WELDMENT, LOWER LADDER
5	**590127**	8	PLUG 1-1/4" PLSTC SQ TUBE
6	**590216**	1	FAST SERIAL TAG
7	**590461**	1	SHOCK, GAS, 90LB, LADDER
8	**596128M**	2	BOLT, HH 3/8-16 X 1 GR5 MAGNI
9	**596229M**	3	NUT, HEX NYLOCK 3/8-16 MAGNI
10	**596231M**	2	NUT, HEX NYLOCK 1/2-13 MAGNI
11	**596258M**	6	WASHER, FLAT 3/8 MAGNI
12	**596260M**	2	WASHER, FLAT 1/2 MAGNI
13	**596635M**	1	BOLT, HH 3/8-16 x 1-1/4 MAGNI
14	**596636M**	2	BOLT, HH 3/8-16 X 2-1/4 GR5 MAGNI
15	**596638M**	2	BOLT, HH 1/2-13 X 2-1/4 GR5 MAGNI
16	**596769M**	4	NUT, HEX FLANGE 3/8-16 MAGNI
17	**596844M**	1	PIN, SPRING, 1/4 X 1-1/2, MAGNI
18	**790001**	1	SPRING, EDUCTOR LATCH
19	**800003**	1	DECAL, WARNING FALLING HAZARD
20	**800021**	2	FAST LOCATION DECAL

Boom Rests (for Truss Boom)

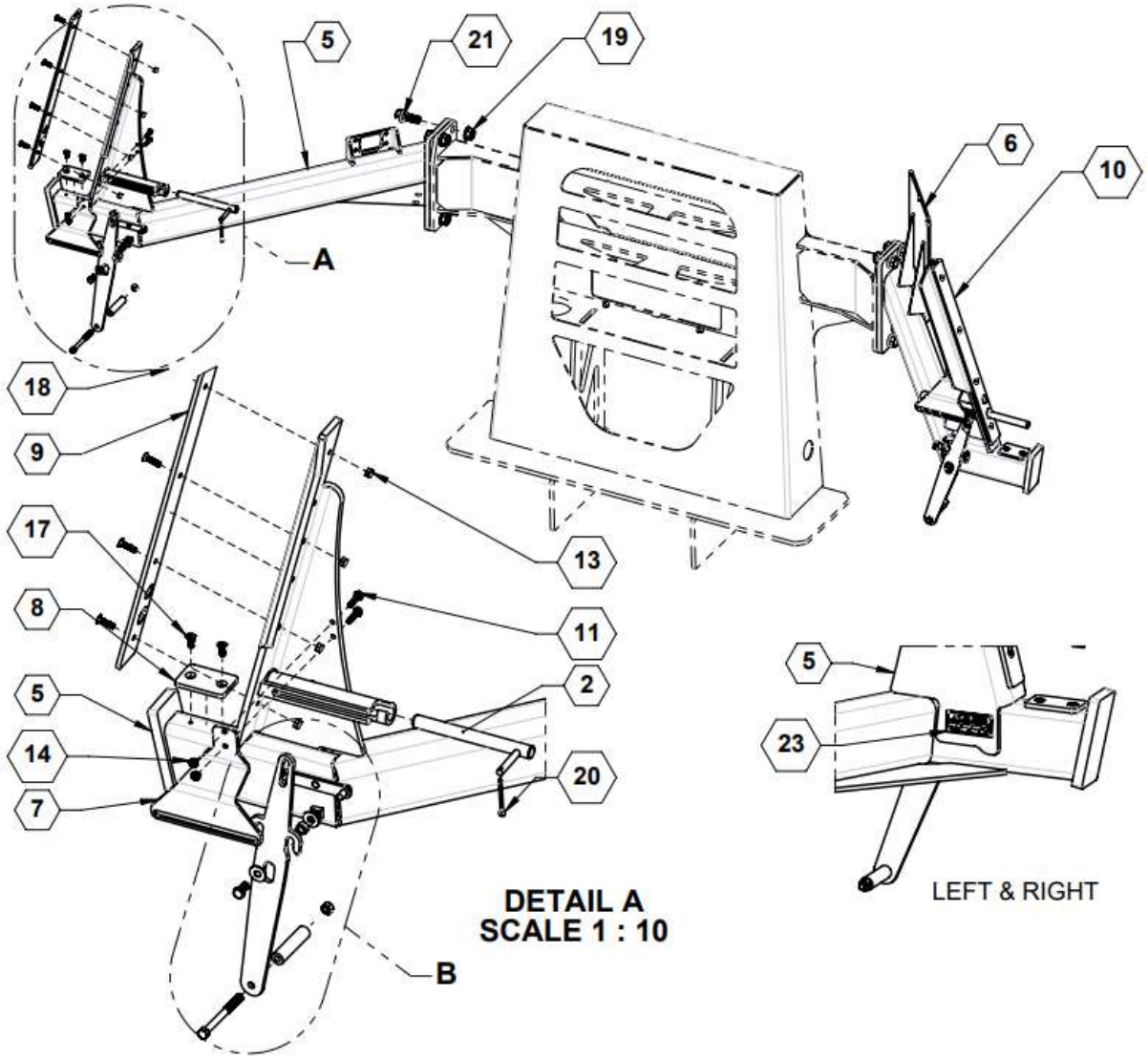

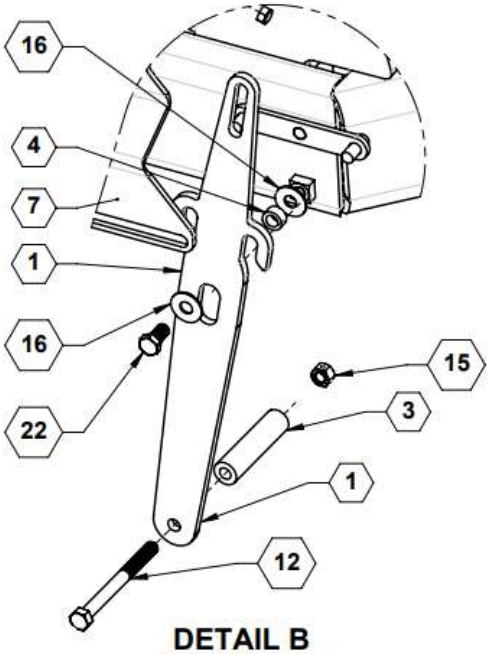

DETAIL B
SCALE 1 : 5

Parts List 36606: Boom Rests (for Truss Boom)

ITEM	PART NO.	QTY.	DESCRIPTION
1	**36314**	2	PLATE, TRANSPORT LEVER
2	**36320**	2	WELDMENT PIN, LATCH SLIDER
3	**36321**	2	TUBE, LEVER HANDLE
4	**36331**	2	PLATE, LATCH DAGGER BUSHING
5	**36616L**	1	WELDMENT, BOOM REST L
6	**36616R**	1	WELDMENT, BOOM REST R
7	**38268**	2	PLATE, PIN WINDOW
8	**590106**	2	PAD, TRANSPORT
9	**590475L**	1	PLATE, WING REST BUMP, LH
10	**590475R**	1	PLATE, WING REST BUMP, RH
11	**596102M**	4	BOLT, HH 1/4-20 X 1 GR5 MAGNI
12	**596134M**	2	BOLT, HH 3/8-16 X 4 GR5 MAGNI
13	**596227M**	8	NUT, HEX NYLOCK 1/4-20 MAGNI
14	**596235M**	4	NUT, CENTERLOCK, 1/4-20 MAGNI
15	**596237M**	2	NUT, CENTERLOCK 3/8-16 MAGNI
16	**596258M**	4	WASHER, FLAT 3/8 MAGNI
17	**596629M**	4	FHSCS 1/4-20 X 3/4 MAGNI
18	**596630M**	8	FHSCS 1/4-20 X 1 MAGNI
19	**596775M**	8	NUT, HEX FLANGE 3/4-10 GR8 MAGNI
20	**596808M**	2	COTTER PIN, 3/16 X 2" MAGNI
21	**596814M**	8	BOLT, HEX FLANGE 3/4-10 X 2 GR8 MAGNI
22	**596818M**	2	BOLT, HH 3/8-16 X 3/4 GR5 MAGNI
23	**800010**	2	DECAL, SAFETY PIN

Boom Rests (for Camera-Ready Boom)

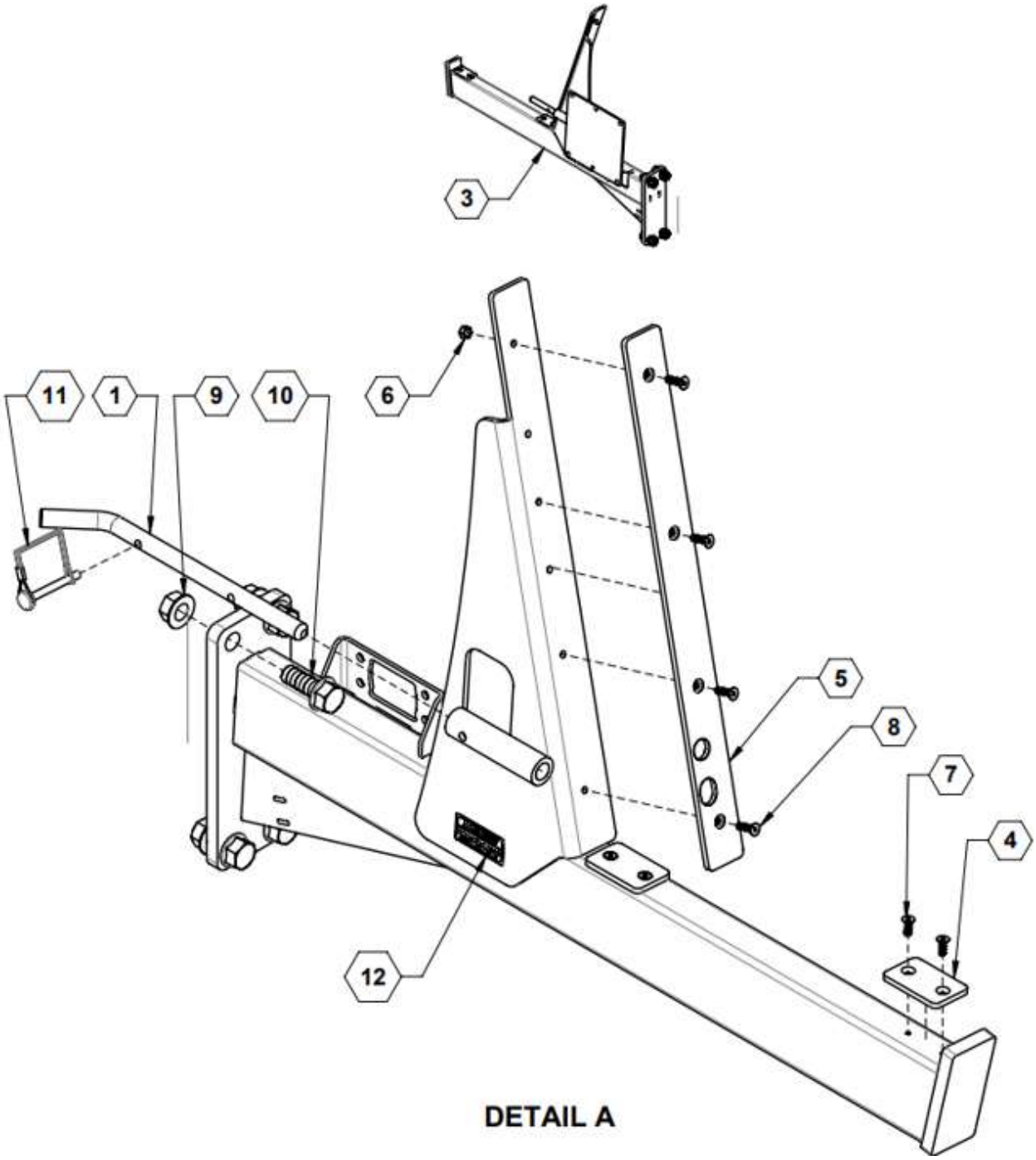

Parts List 36860: Boom Rests (for Camera-Ready Boom)

ITEM	PART NO.	QTY.	DESCRIPTION
1	**7618**	2	3/4" CRR 1018, 14" LG
2	**36865**	1	WELDMENT, LH WING REST
3	**36866**	1	WELDMENT, RH WING REST
4	**590106**	4	PAD, TRANSPORT
5	**590475L**	2	(2025) PLATE, WING REST BUMP, LH
	590483		(2026) POLY, WING REST SLIDE
6	**596227M**	8	NUT, HEX NYLOCK 1/4-20 MAGNI
7	**596629M**	8	FHSCS 1/4-20 X 3/4 MAGNI
8	**596630M**	8	FHSCS 1/4-20 X 1 MAGNI
9	**596775M**	8	NUT, HEX FLANGE 3/4-10 GR8 MAGNI
10	**596814M**	8	BOLT, HEX FLANGE 3/4-10 X 2 GR8 MAGNI
11	**720001**	2	SNAP PIN, 5/16
12	**800010**	2	DECAL, SAFETY PIN

Eductor Lift – 15 Gal.

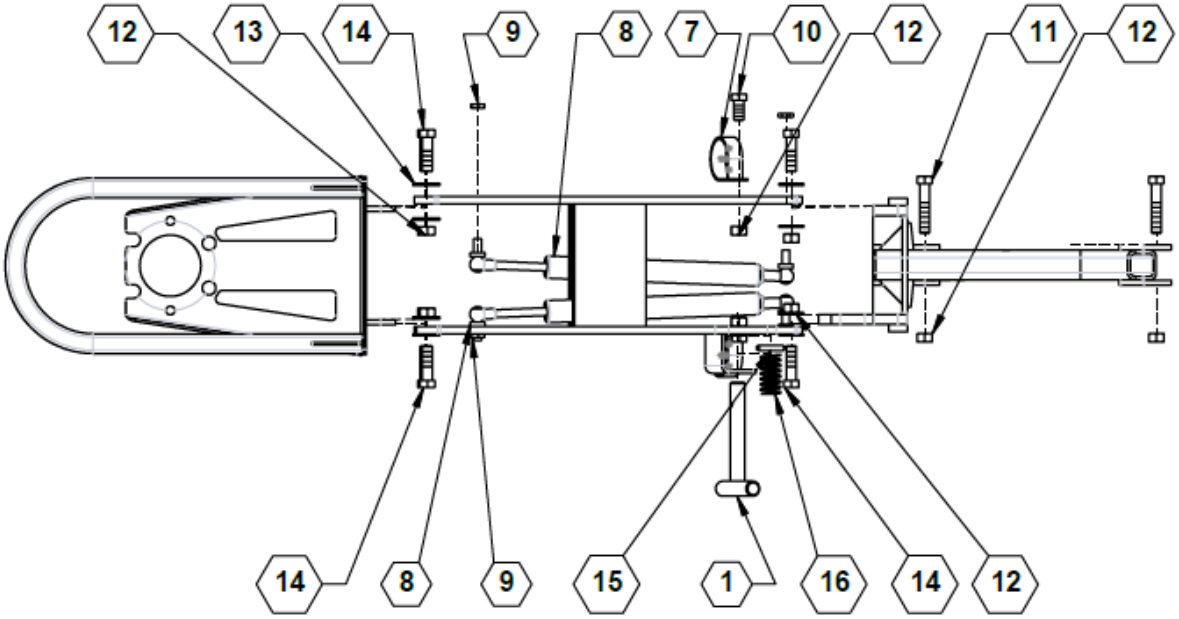

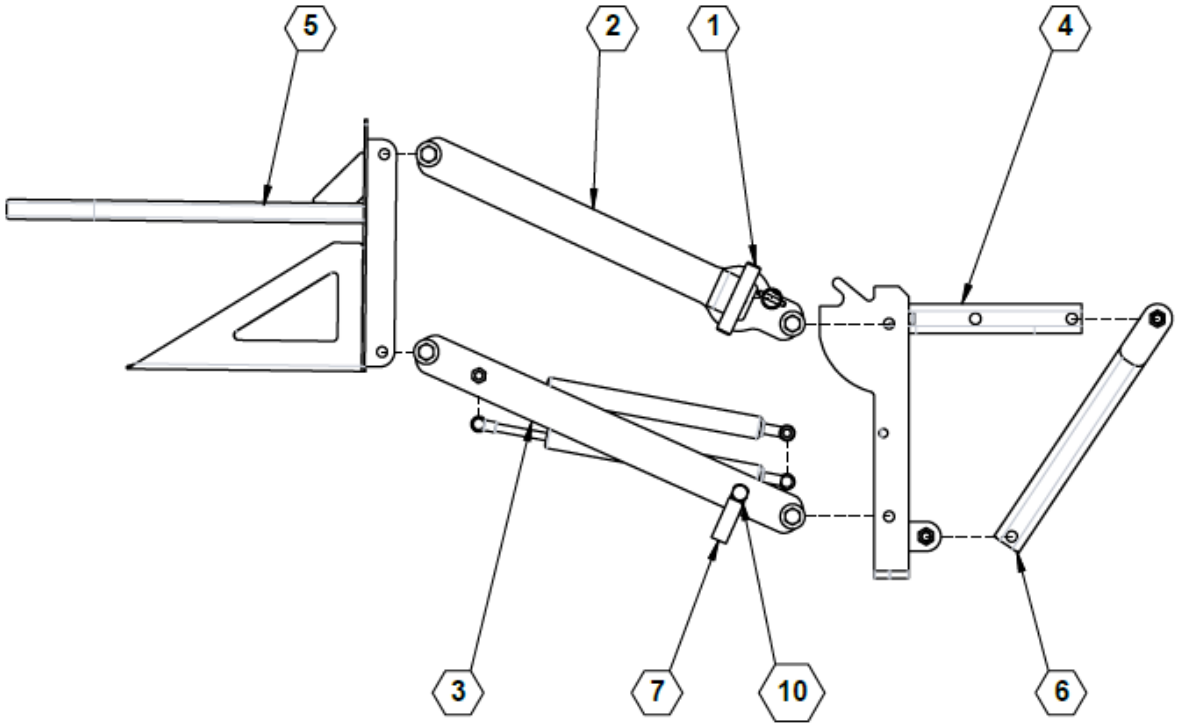

See also: Eductor Option – 15 Gal.

Parts List 34300: Eductor Lift – 15 Gal.

ITEM	PART NO.	QTY.	DESCRIPTION
1	**7981**	1	TRANSPORT LOCK PIN
2	**34309**	1	WELDMENT, LINK UPPER
3	**34463**	1	WELDMENT, LOWER LINKAGE
4	**34562**	1	FRAME, EDUCTOR BASE
5	**34589**	1	WELDMENT, EDUCTOR MOUNT
6	**36175**	1	WELDMENT, BRACING ARM
7	**540052**	2	P-CLAMP, 3" W/3/8" HOLE
8	**590202**	2	SPRING, GAS, TENSION, PRELOAD 125LBS, BALL STUDS
9	**590351**	4	M10-1.5 HH JAM NUT
10	**596152M**	2	BOLT, HH 1/2 X 1 GR5 MAGNI
11	**596155M**	2	BOLT, HH 1/2-13 X 2-1/2 GR5 MAGNI
12	**596239M**	12	NUT, CENTERLOCK, 1/2-13 MAGNI
13	**596260M**	16	WASHER, FLAT 1/2 MAGNI
14	**596639M**	8	BOLT, HH 1/2 X 1-3/4 GR5 MAGNI
15	**596844M**	1	PIN, SPRING, 1/4 X 1-1/2, MAGNI
16	**790001**	1	SPRING, EDUCTOR LATCH

STEERABLE HITCH

Steerable Hitch Option

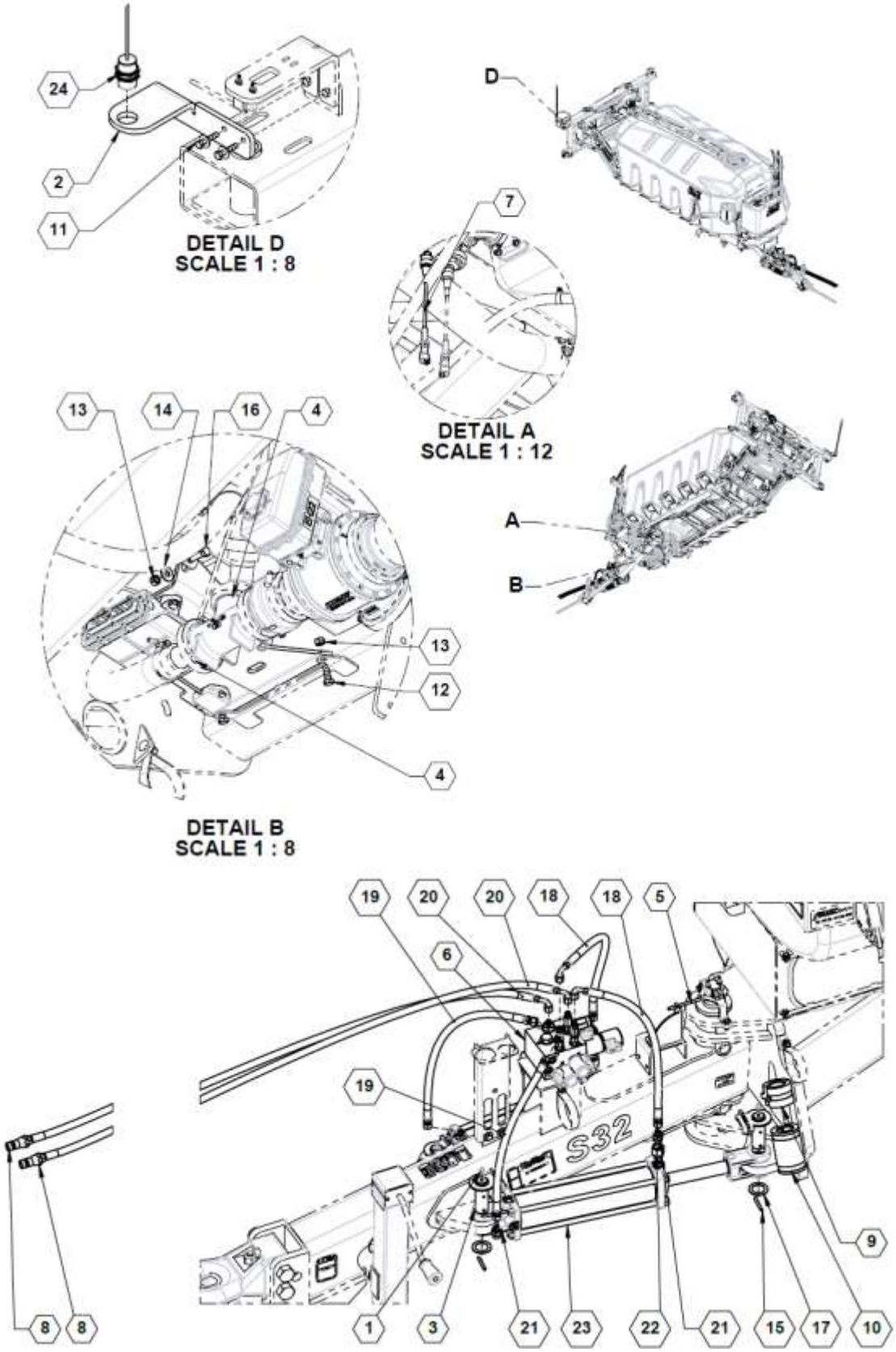

Parts List 36681: Steerable Hitch Option

ITEM	PART NO.	QTY.	DESCRIPTION
1	**759**	4	ZERK, 1/4-28 STRAIGHT PIPE THREAD
2	**26344**	1	PLATE, PROX MOUNT
3	**28927**	4	WLDMT, STEERABLE HITCH PIN
4	**36682**	1	ASSEMBLY, STEER NODE MOUNT
5	**36684**	1	ASSEMBLY, HITCH ROTATION SENSOR
6	**36685**	1	ASSEMBLY, STEERABLE HYD BLOCK
7	**36686**	1	ASSEMBLY, PRESSURE SENSOR
8	**520048**	2	PIONEER COUPLER #8 FORB
NS	**621004**	1	HOSE GRIP, #8ORB, TAN/TAN
NS	**621008**	1	HOSE GRIP, #8ORB, TAN/BLACK
9	**590414**	2	CYLINDER STOP, 2"
10	**590415**	2	CYLINDER STOP, 4.25"
11	**596116M**	2	BOLT, HH 5/16-18 X 1-1/2 GR5 MAGNI
12	**596128M**	2	BOLT, HH 3/8-16 X 1 GR5 MAGNI
13	**596237M**	3	NUT, CENTERLOCK 3/8-16 MAGNI
14	**596258M**	1	WASHER, FLAT 3/8 MAGNI
15	**596301M**	4	PIN, SPRING, 1/4 X 2" MAGNI
16	**596635M**	1	BOLT, HH 3/8-16 x 1-1/4 MAGNI
17	**596744M**	4	BUSHING, MACHINE, 1-1/4 x 14 GA MAGNI
18	**600138-01-ZN**	2	HOSE ASSY, 6-6FJX-6FJX90-26
19	**600138-02-ZN**	2	HOSE ASSY, 6-6FJX-6FJX-25
20	**600138-03-ZN**	2	HOSE ASSY, 6-6FJX-6FJX-81
21	**610011**	4	JIC #6 TO ORING #8
22	**610095**	2	.093 ORIFICE FITTING
23	**620103**	2	CYLINDER, 3" X 12" 1-1/4" ROD
24	**632022**	1	PROXIMITY SENSOR
NS	**632233**	1	CABLE, 3 PIN DEUTSCH EXTENSION 5’
25	**830017**	0	SCHEMATIC, HYDRAULIC S-SERIES

Steerable Hitch Node Mount

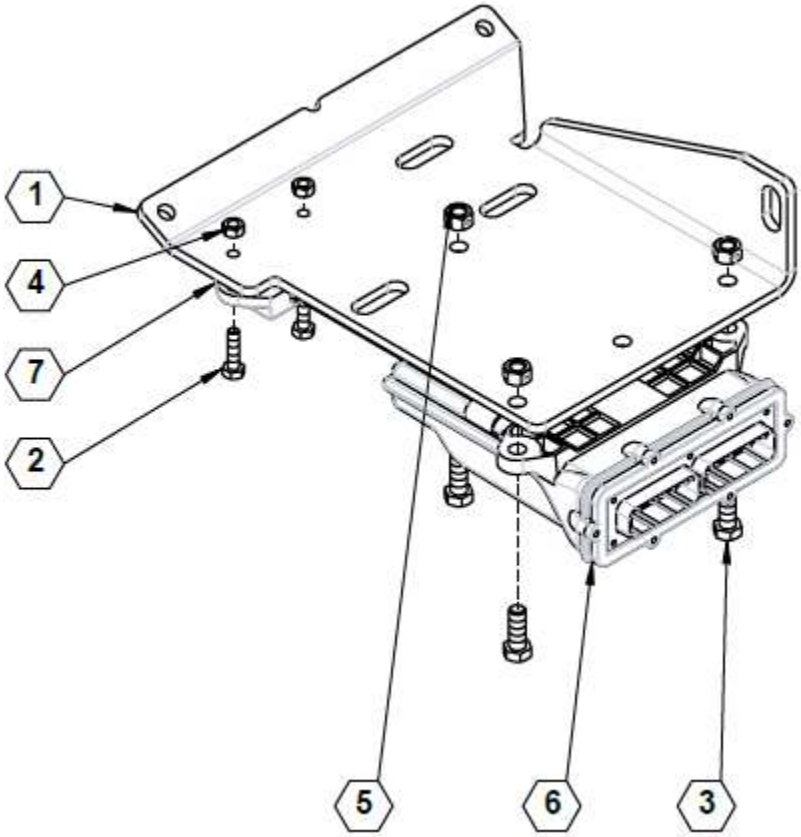

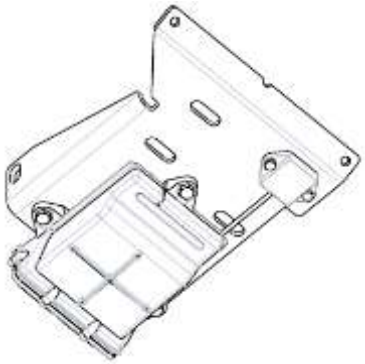

Parts List 36682: Steerable Hitch Node Mount

ITEM	PART NO.	QTY.	DESCRIPTION
1	**36683**	1	PLATE, STEER NODE BRACKET
2	**596102M**	2	BOLT, HH 1/4-20 X 1 GR5 MAGNI
3	**596128M**	3	BOLT, HH 3/8-16 X 1 GR5 MAGNI
4	**596235M**	2	NUT, CENTERLOCK, 1/4-20 MAGNI
5	**596237M**	3	NUT, CENTERLOCK 3/8-16 MAGNI
6	**632020**	1	RAVEN STEERING NODE
7	**632098**	1	KIT, SENSOR, TILT

Steerable Hitch Hydraulic Block

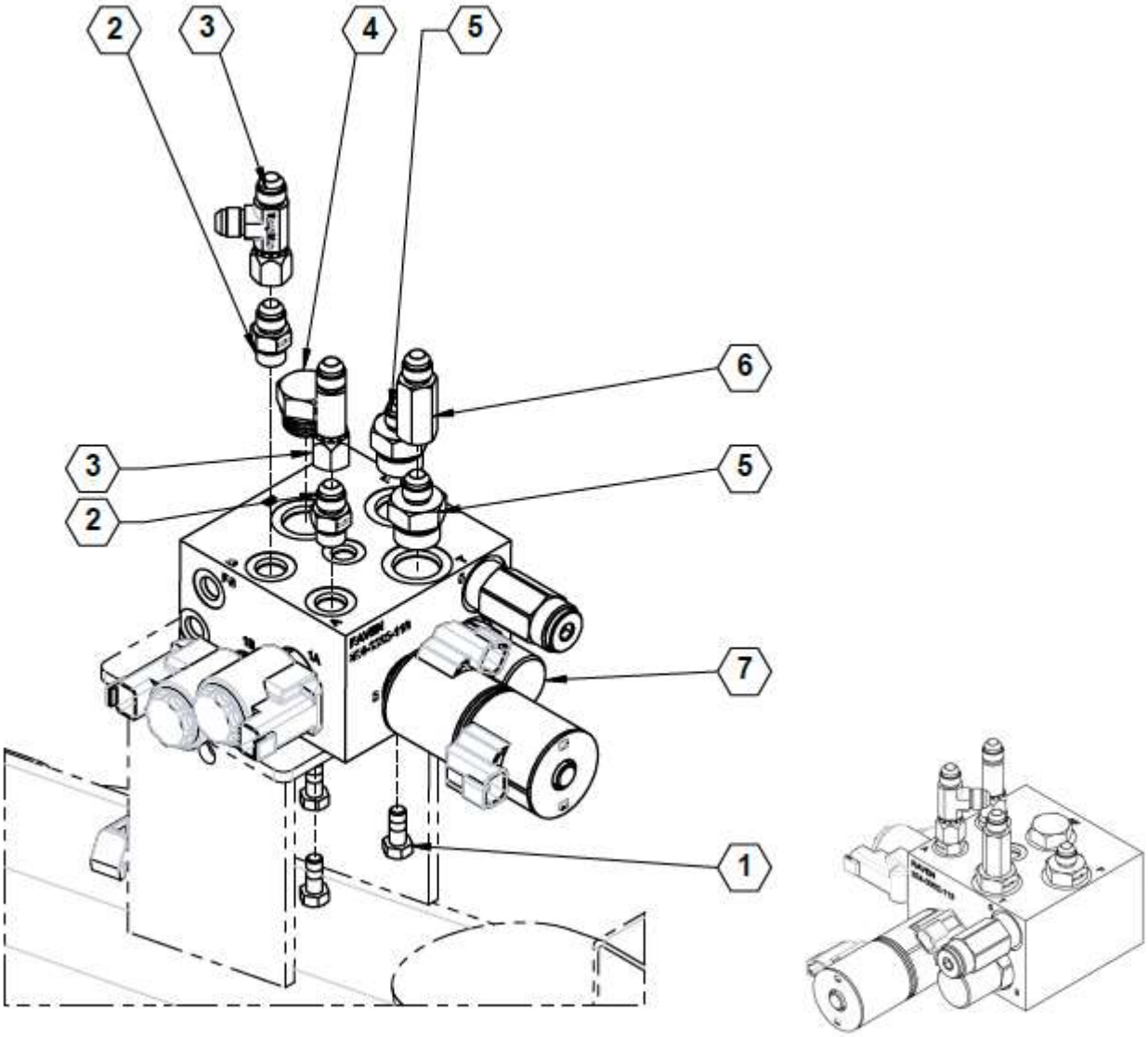

Parts List 36685: Steerable Hitch Hydraulic Block

ITEM	PART NO.	QTY.	DESCRIPTION
1	**596114M**	4	BOLT, HH 5/16-18X3/4 GR5 MAGNI
2	**610010**	2	ADAPTER, -6MJIC X -6MORB
3	**610027**	2	JIC #6 RUN TEE
4	**610056**	1	PLUG, -10 MORB HEX
5	**610192**	2	FITTING, 06MJ-10MORB STRAIGHT
6	**610193**	1	CHECK VALVE, 06FJ-06MJ STRAIGHT
7	**632021**	1	VALVE BLOCK, RAVEN STEERING

Steerable Hitch Rotation Sensor

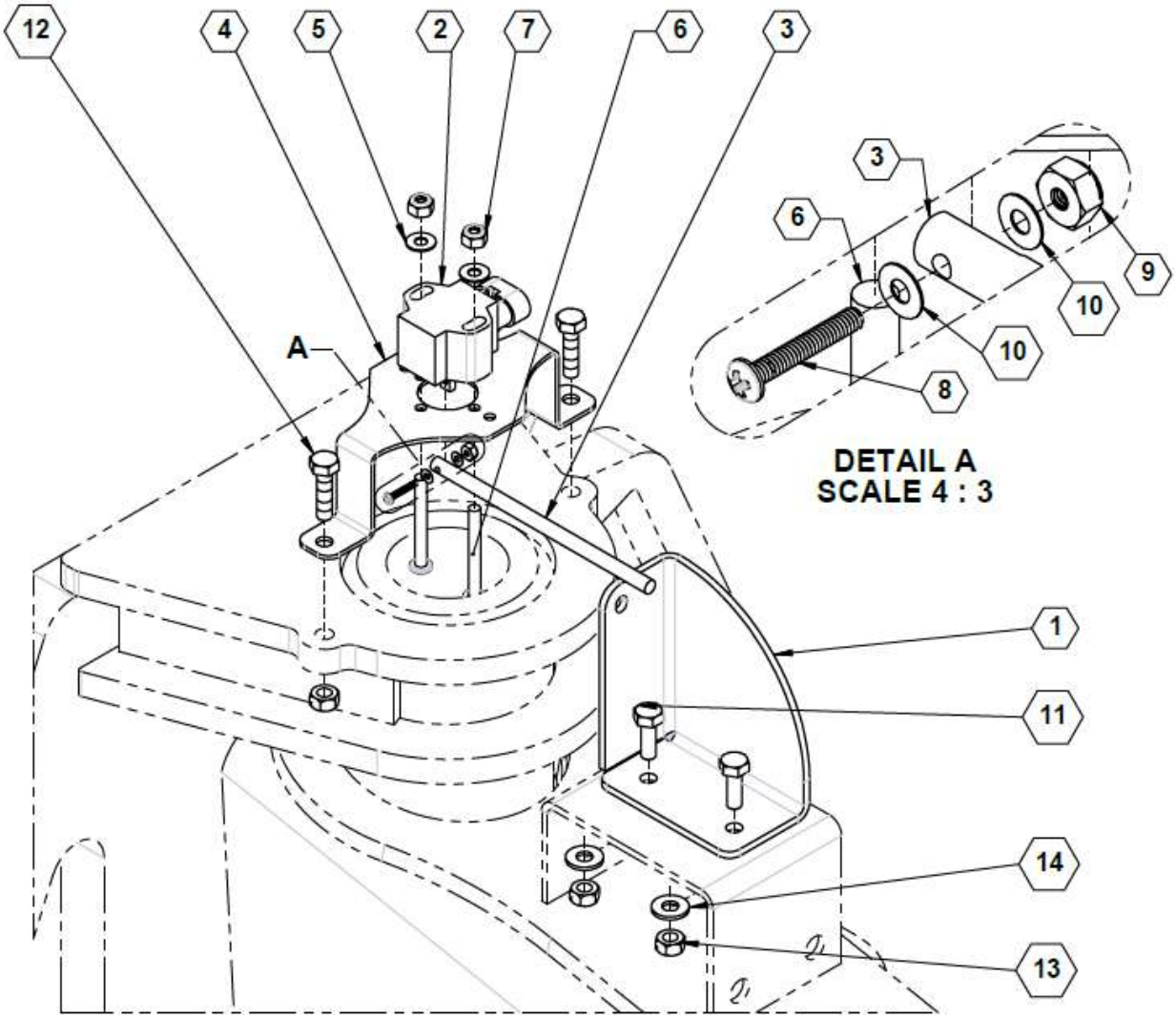

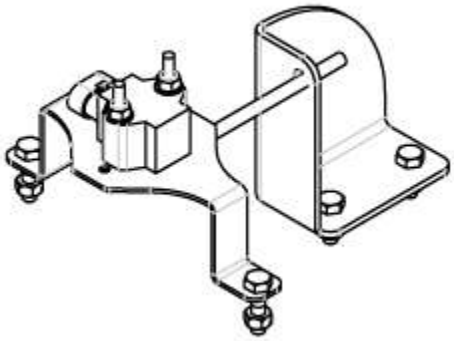

Parts List 36684: Steerable Hitch Rotation Sensor

ITEM	PART NO.	QTY.	DESCRIPTION
1	**21273**	1	INDICATOR, STEERABLE HITCH
2	**21495**	1	180 ROTARY SENSOR
3	**22906**	1	ROD, ROTARY SENSOR LEVER
4	**26190**	1	MOUNT, SENSOR
5	**590272**	2	WASHER SAE #10 SS18-8
6	**590273**	2	SCREW PHIL 10-24 X 1.75 SS18-8
7	**590274**	2	NUT NYLON 10-24 SS18-8
8	**590275**	1	SCREW PHIL 3-48 X .625 SS18-8
9	**590276**	1	NUT NYLON 3-48 SS18-8
10	**590277**	2	WASHER #3 SS18-8
11	**596101M**	2	BOLT, HH 1/4-20 X 3/4 GR5 MAGNI
12	**596102M**	2	BOLT, HH 1/4-20 X 1 GR5 MAGNI
13	**596235M**	4	NUT, CENTERLOCK, 1/4-20 MAGNI
14	**596256M**	2	WASHER, FLAT 1/4 USS MAGNI

Steerable Hitch Hillside Compensator, Tracks

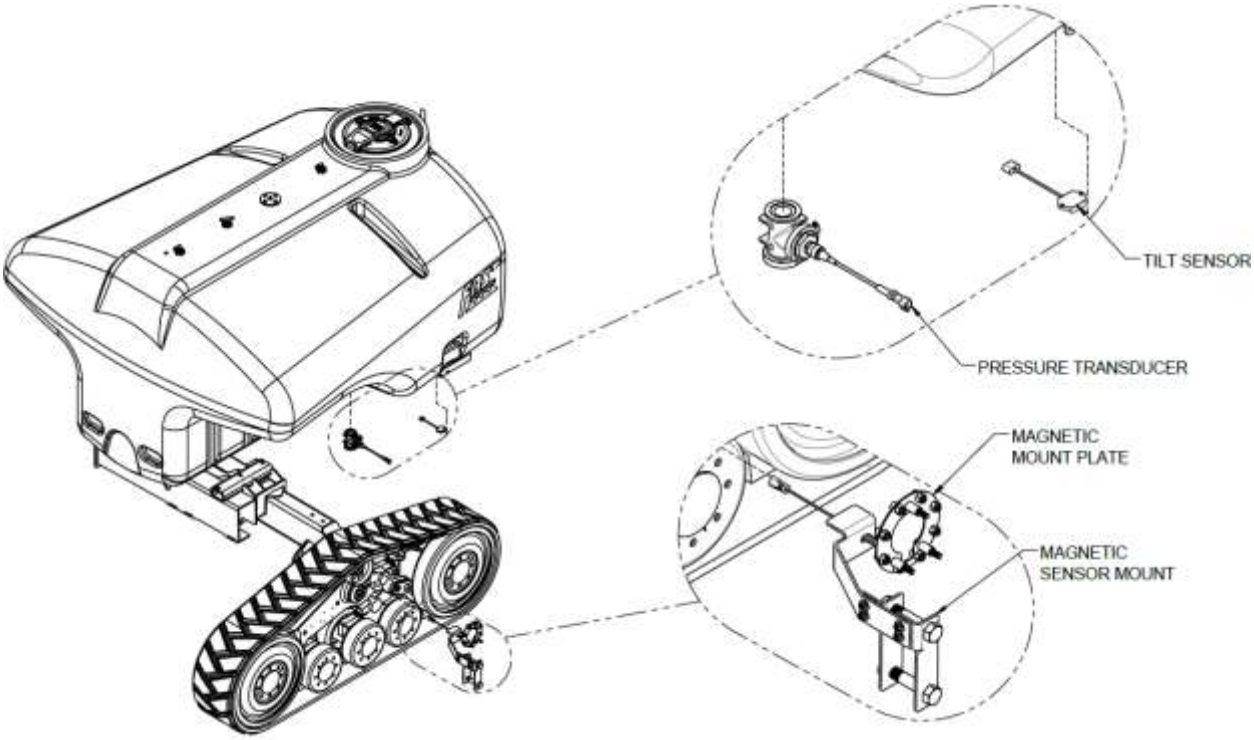

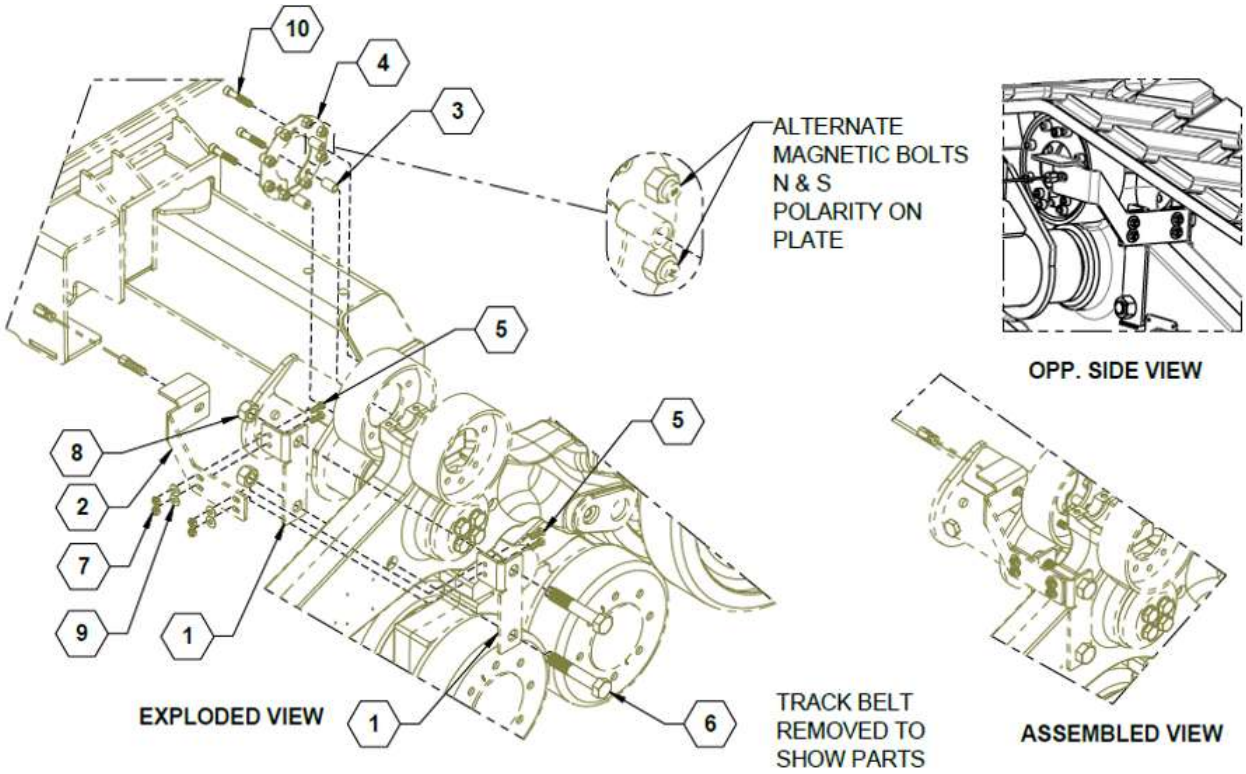

Parts List 28175: Steerable Hitch Hillside Compensator, Tracks

ITEM	PART NO.	QTY.	DESCRIPTION
1	**27239**	2	BRACKET, VERTICAL SUPPORT
2	**27240**	1	BRACKET, SENSOR SUPPORT
3	**27241**	3	SPACER, MAGNET SENSOR PLATE
4	**27242**	1	PLATE, MAGNET MOUNT
5	**596128M**	4	BOLT, HH 3/8-16 X 1 GR5 MAGNI
6	**596205M**	2	BOLT, HEX 1-8 X 5-1/2 GR5 MAGNI
7	**596237M**	4	NUT, CENTERLOCK 3/8-16 MAGNI
8	**596242M**	2	NUT, CENTERLOCK, 1" MAGNI
9	**596258M**	4	WASHER, FLAT 3/8 MAGNI
10	**596835**	3	SCREW, SOCKET HEAD CAP, M12X1.75 X 60MM 12.9 ZP

See also:

- Eductor Supply and Hillside Pressure Compensation
- Steerable Hitch Node Mount

Steerable Hitch Reverse Detection Sensors

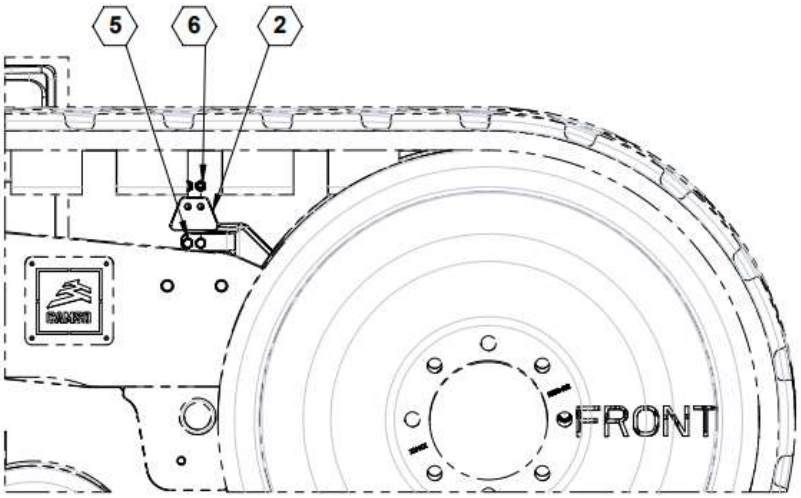

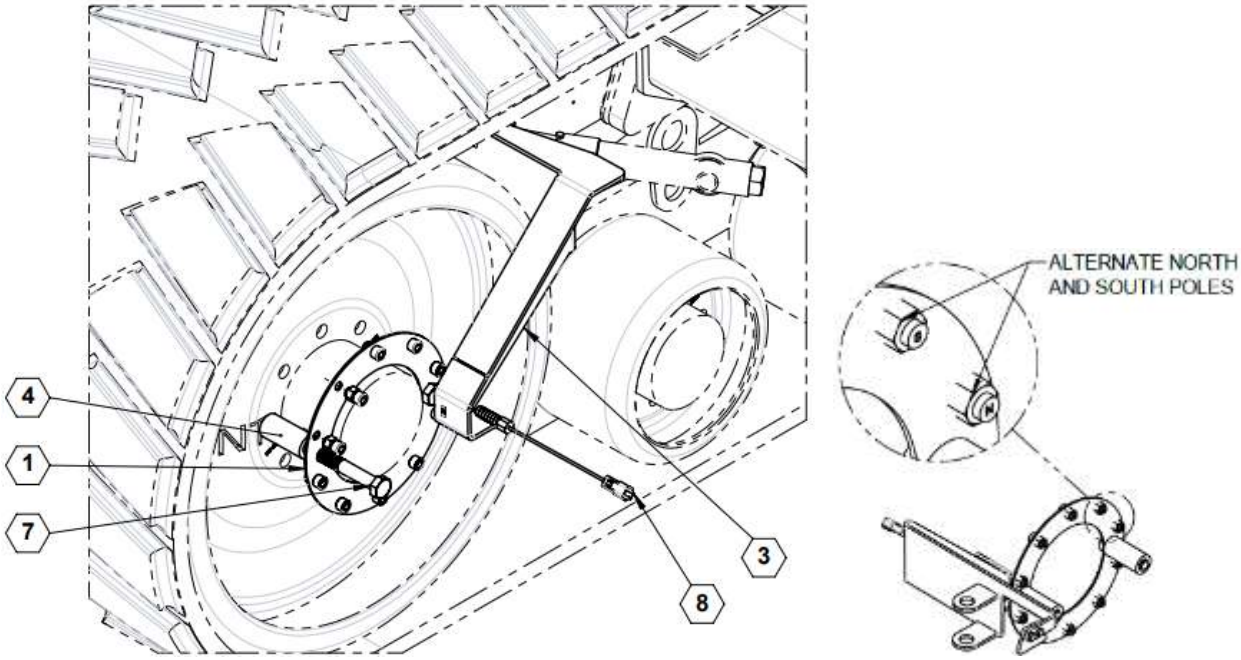

Parts List 28200: Steerable Hitch Reverse Detection Sensors

ITEM	PART NO.	QTY.	DESCRIPTION
1	**28199**	1	PLATE, MAGNET MOUNT
2	**28218**	1	PLATE, BRACKET ORIENTATOR
3	**28231**	1	WELDMENT, SENSOR REAR BRACKET
4	**28234**	2	TUBE, MAGNET PLATE SPACER
5	**596114M**	2	BOLT, HH 5/16-18X3/4 GR5 MAGNI
6	**596236M**	2	NUT, CENTERLOCK, 5/16-18 MAGNI
7	**596825M**	2	BOLT, HH 10.9 M20 X 90MM MAGNI
8	**632096**	1	KIT, REVERSE DETECTION, 15K, 20K & CAMSO

Steerable Hitch Ready Option

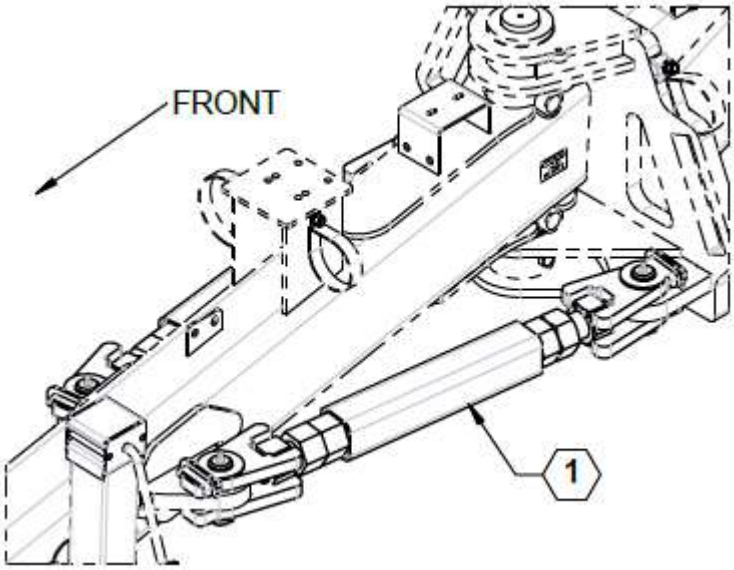

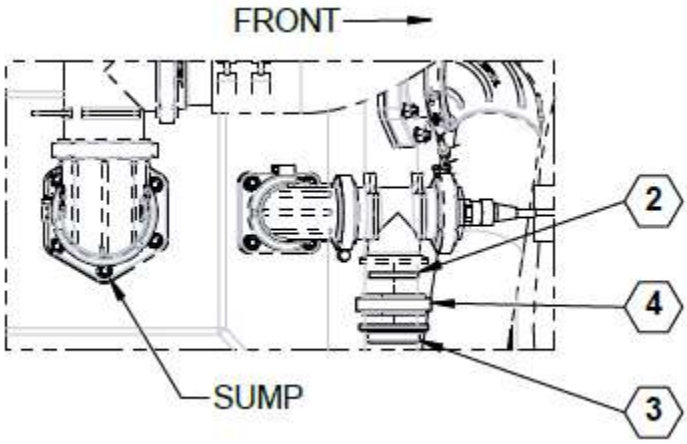

Parts List 36680: Steerable Hitch Ready Option

ITEM	PART NO.	QTY.	DESCRIPTION
1	35850	1	OPTN, STRBL HITCH READY
2	**530014**	1	GASKET, 1.500 EPDM
3	**530093**	1	PLUG, MANIFOLD, 2.00
4	**540001**	1	CLAMP, 2.00 STD WORM SCREW

Steerable Hitch Ready Links

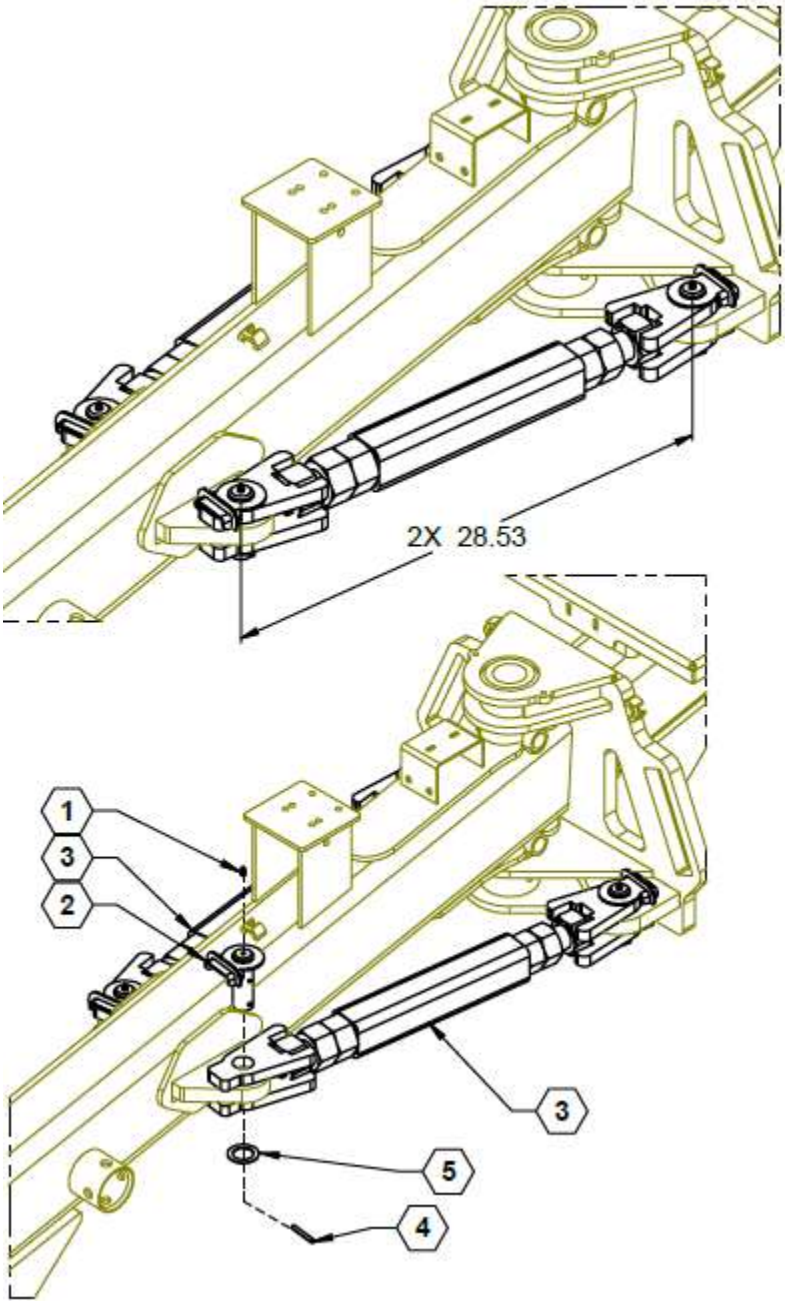

Parts List 35850: Steerable Hitch Ready Links

ITEM	PART NO.	QTY.	DESCRIPTION
1	**759**	4	ZERK, 1/4-28 STRAIGHT PIPE THREAD
2	**28927**	4	WLDMT, STEERABLE HITCH PIN
3	**35705**	2	ASSY, TURNBUCKLE
4	**596301M**	4	PIN, SPRING, 1/4 X 2" MAGNI
5	**596744M**	4	BUSHING, MACHINE, 1-1/4 x 14 GA MAGNI

Steerable Hitch Locking Turnbuckle

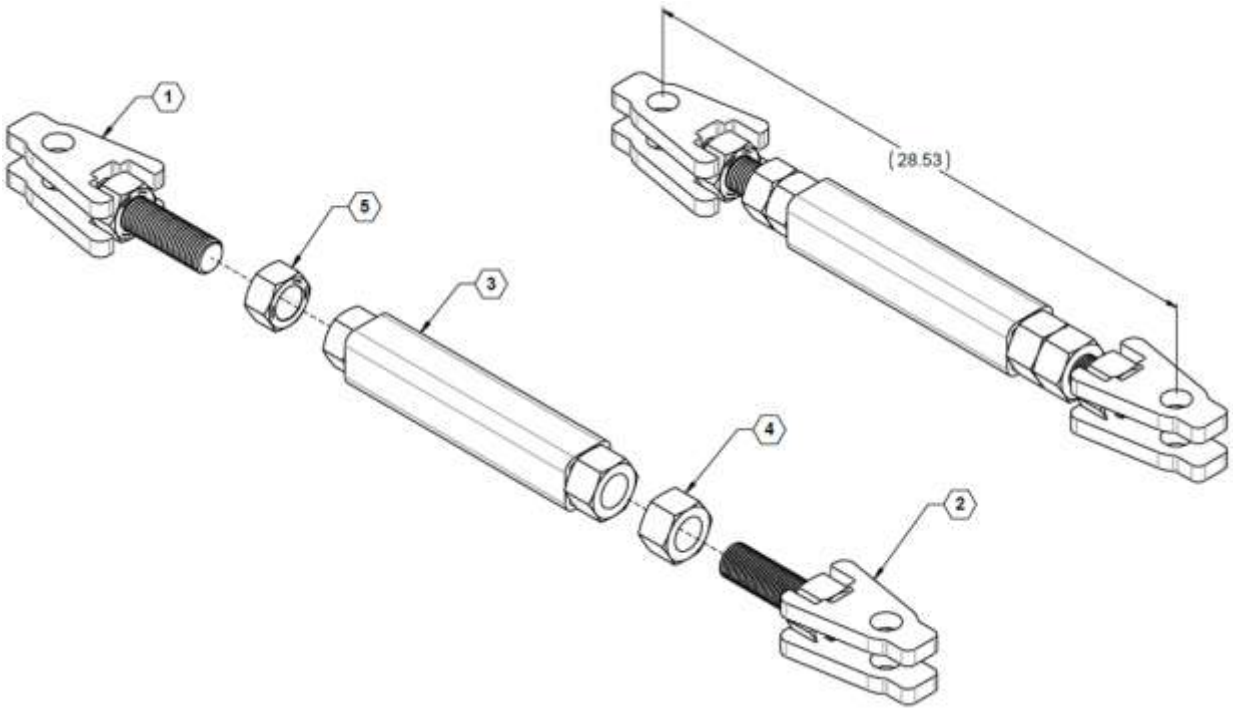

Parts List 35705: Steerable Hitch Locking Turnbuckle

ITEM	PART NO.	QTY.	DESCRIPTION
1	**35736**	1	WELDMENT, LH TURNBUCKLE
2	**35737**	1	WELDMENT, RH TURNBUCKLE
3	**35738**	1	WELDMENT, TURNBUCKLE CLAMP
4	**596813M**	1	NUT, HEX 1-1/2-6 GR8 MAGNI
5	**596857M**	1	NUT, LH HEX 1-1/2-6 GR8 MAGNI

TRAILER AXLES, TIRES, & TRACKS

See also:

- Axles
  - 26756 Axle Spacer
  - 35683 Single Axle 25k 80”-120”
  - 36360 Single Axle 25k 84”-144”
  - 26742 / 27939 Track Axle 88”-132”
  - 26743 / 27947 Track Axle 120”-144”
  - 28235 Track Axle 25” TTS 90” & 120”
- Tires
  - 26749 / 26876 480/80R50 Singles
  - 35684 / 35685 580/85R42 Singles
  - 36351 / 36352 710/70R42 Singles
  - 26750 / 26877 380/80R46 Duals
  - 26751 / 26878 380/90R54 Duals
- Tracks
  - 700202 / 700206 15” TTS
  - 700212 / 700225 18” TTS
  - 700211 / 700224 25” TTS

820128-Tires-Tracks-and-Axles-Catalog-Parts-Manual-English.pdf

Adjustable Track Axle, 80”- 144”

NOTES:
1. BOLTS TO BE INSTALLED IN ORIENTATION SHOWN
2. BOLTS TO BE TIGHTENED WITH 1/2" IMPACT
3. ADD 3" FLANGE COUPLING TO BOTTOM OF SUMP ON TANK ABOVE THE 3" FLANGE SWEEP MANIFOLD TO CLEAR THE BOTTOM OF TRACK AXLE

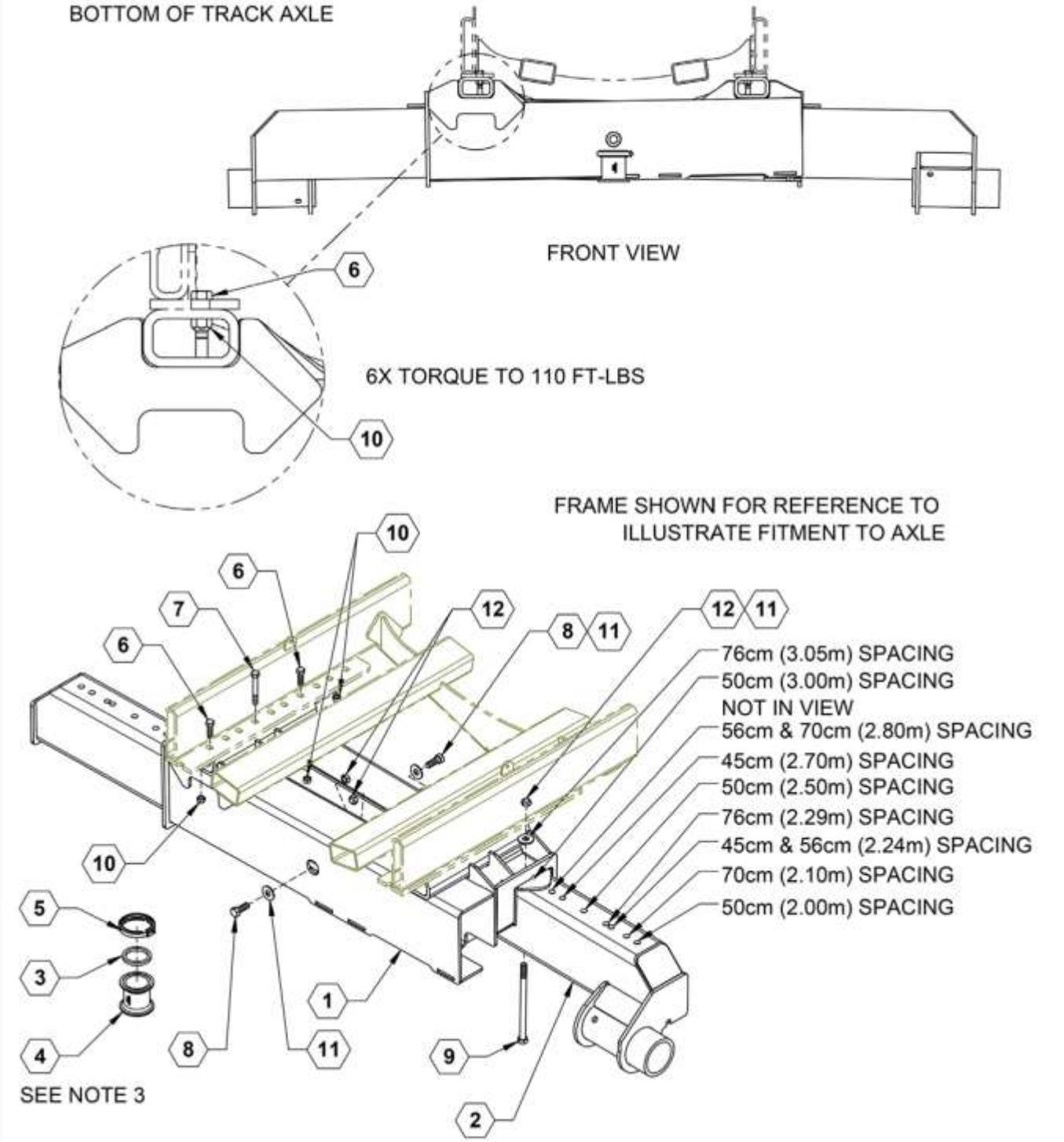

Parts List 26742 / 26743 / 27939 / 27947 / 28235: Adjustable Track Axle, 80”- 144”

ITEM	PART NO.	QTY.	DESCRIPTION
1	**23955**	1	AXLE RECEIVER
2	**23958**	2	ADJUSTABLE TRACK AXLE, 80" - 132"
	26312	2	ADJUSTABLE TRACK AXLE, 84" - 144"
	27948	2	ADJUSTABLE TRACK AXLE, 45-76cm
	28226 / 28233	1 ea.	WLDMT, LH AXLE, 90 & 120”, TTS 70 25” TRACKS
3	**530024**	1	GASKET, 3" EPDM
4	**530443**	1	FLANGE COUPLING 3"
5	**540003**	1	CLAMP, WORM SCREW 3"
6	**596170M**	4	BOLT, HH 5/8-11X2 GR5 MAGNI
7	**596177M**	2	BOLT, HH 5/8-11X4.5 GR5 MAGNI
8	**596184M**	2	BOLT, HH 3/4X2 GR5 MAGNI
9	**596210M**	2	BOLT, HH 3/4-10 X 12 GR5 MAGNI
10	**596243M**	6	NUT, TOPLOCK 5/8-11 G8 MAGNI
11	**596259M**	4	WASHER, FLAT 3/4 MAGNI
12	**596626M**	4	NUT, TOPLOCK 3/4-10 G5 MAGNI
13	**800259**	1	DECAL, CAUTION - TRACK FIRE

BOOM & TOUCHDOWN WHEELS

See Camera-Ready Boom in S-Boom Parts Manual 820119

https://fastagsolutions.com/820119-s-boom-parts-manual-english/

Truss Boom 120’ / 132’

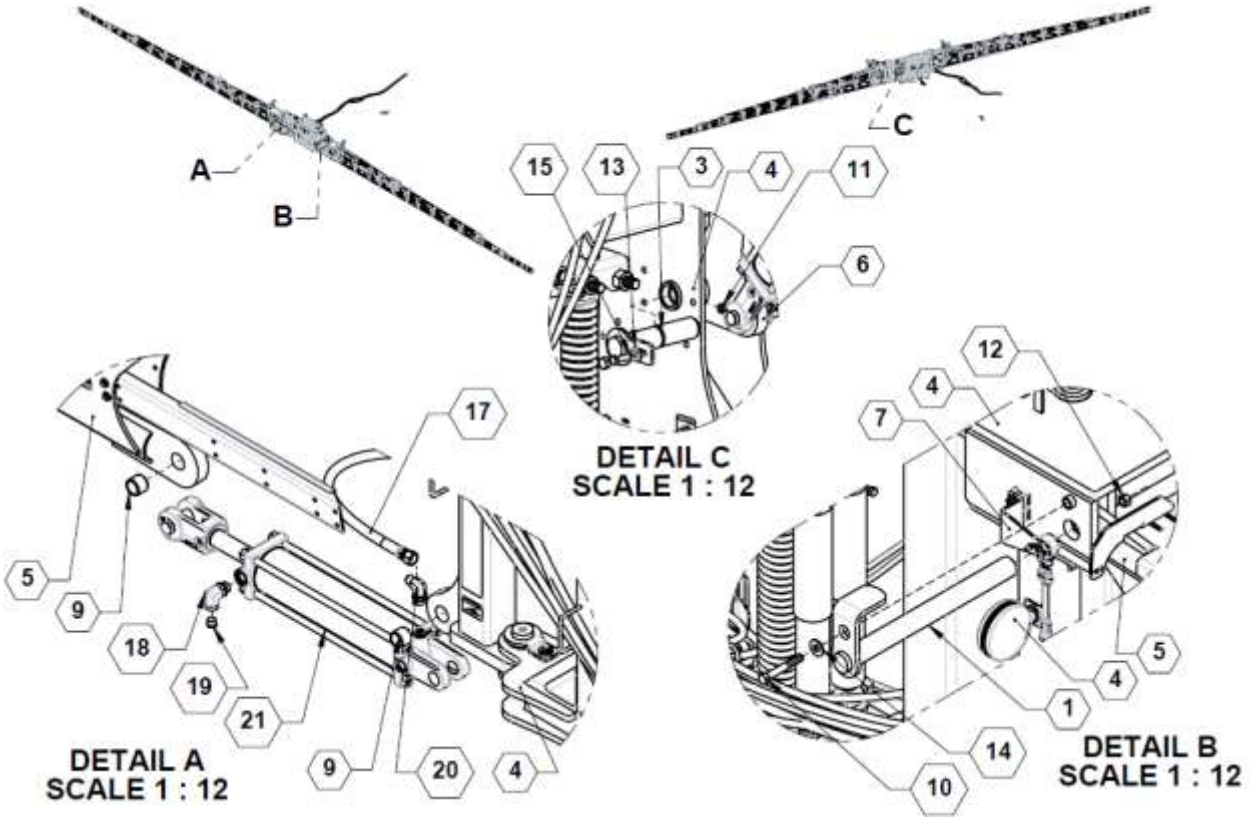

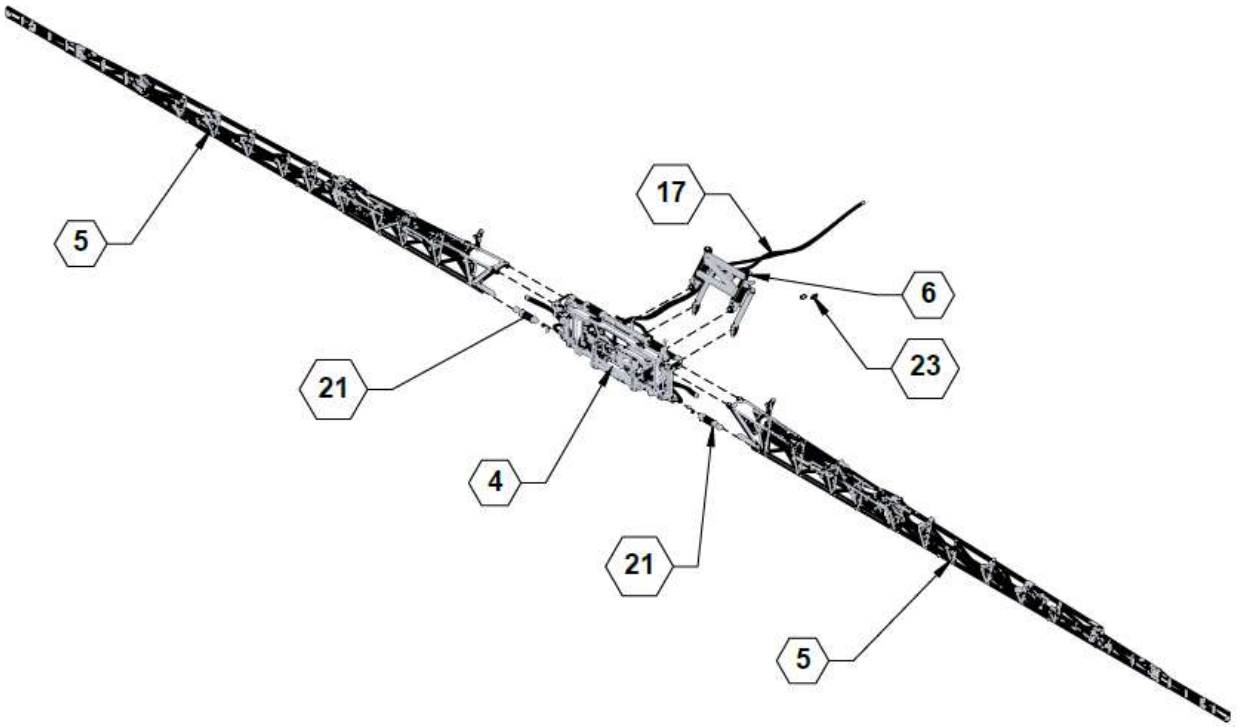

Parts List 36700 / 36750: Truss Boom 120’ / 132’

ITEM	PART NO.	QTY.	DESCRIPTION
1	**18265**	2	PIN, 1 1/2" MAIN WING
2	**18268**	2	DOM, 7/16" Lg
3	**35561**	4	(HEAD OUTSIDE, SHOWN) PIN, TRUSS CRADLE
	36898		(HEAD INSIDE) PIN, REVERSED TRUSS CRADLE
4	**36699**	1	BOOM, CENTER SECTION WITH HINGES
5	**36705**	2	BOOM 120, WINGS
	36755		BOOM 132, WINGS
6	**36706**	1	ASSEMBLY, P-LINKS AND ACCUMULATOR
7	**36709**	1	ASSEMBLY, XRT AUTOBOOM
8	**530280**	4	BUSHING 1.5ID x 1.75OD x .75LG
9	**530281**	4	SPRING BUSHING 1" I.D.
10	**596157M**	2	BOLT, HH 1/2 X 3-1/2 GR5 MAGNI
11	**596237M**	4	NUT, CENTERLOCK 3/8-16 MAGNI
12	**596239M**	2	NUT, CENTERLOCK, 1/2-13 MAGNI
13	**596258M**	4	WASHER, FLAT 3/8 MAGNI
14	**596260M**	2	WASHER, FLAT 1/2 MAGNI
15	**596635M**	4	BOLT, HH 3/8-16 x 1-1/4 MAGNI
16	**600131**	1	HOSE KIT, TRUSS BOOM CENTER
17	**600135**	1	HOSE KIT, 120' / 132' BOOM
18	**610035**	2	ADAPTER, -8MORB X -6FPT 90
19	**610036**	2	BREATHER VENT, PLUG MALE 3/8-18 NPT
20	**610097**	2	ADAPTER, -8MJIC X -8MORB90
21	**620028**	2	CYLINDER, 3" X 12" 1-1/4" ROD
22	**632055**	1	CABLE, 17' EXTENSION GEN 1 ISO
23	**800375**	2	DECAL, -120 SILVER, 120FT BOOM

Truss Boom Center Section with Hinges

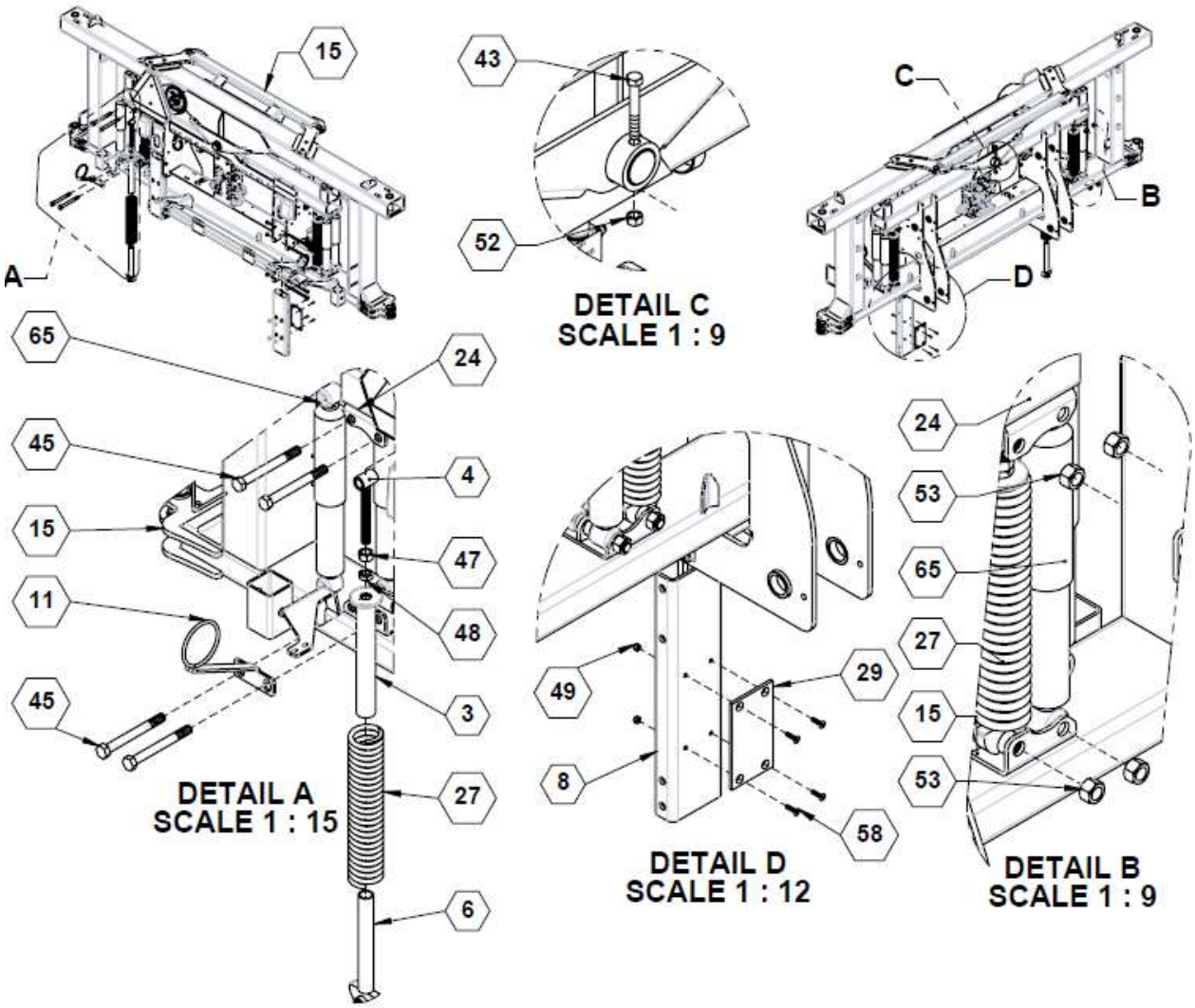

Parts List 36699: Truss Boom Center Section with Hinges

ITEM	PART NO.	QTY.	DESCRIPTION
3	**7442**	4	OUTER SPRING GUIDE
4	**7444**	4	SPRING ADJUSTMENT EYEBOLT
5	**11515**	1	PIN, MAIN PIVOT
6	**11620**	4	BASE SPRING MT
8	**16518**	2	TUBE, CRADLE LOCK
11	**18387**	2	FEED HOSE MOUNT
15	**22005**	1	WLDMNT, TRUSS CENTER SECTION
24	**36712**	1	ASSEMBLY, BOOM INNER TO P-LINK
27	**590011**	4	CENTER SECTION SPRING
29	**590079**	2	RUB PLATE
43	**596157M**	1	BOLT, HH 1/2 X 3-1/2 GR5 MAGNI
44	**596163M**	8	BOLT, HH 1/2 X 6-1/2 GR5 MAGNI
45	**596194M**	8	BOLT, HH 3/4-10 X 7 GR5 MAGNI
47	**596217M**	4	NUT, HEX 3/4-10 G5 MAGNI
48	**596225M**	4	NUT, HEX JAM 3/4-10 GR8 MAGNI
49	**596227M**	8	NUT, HEX NYLOCK 1/4-20 MAGNI
52	**596239M**	9	NUT, CENTERLOCK, 1/2-13 MAGNI
53	**596241M**	8	NUT, CENTERLOCK 3/4-10 MAGNI
58	**596630M**	8	FHSCS 1/4-20 X 1 MAGNI
65	**790010**	4	SHOCK, YELLOW 7400 120' CENTER

Truss Boom Center Section with Hinges (continued)

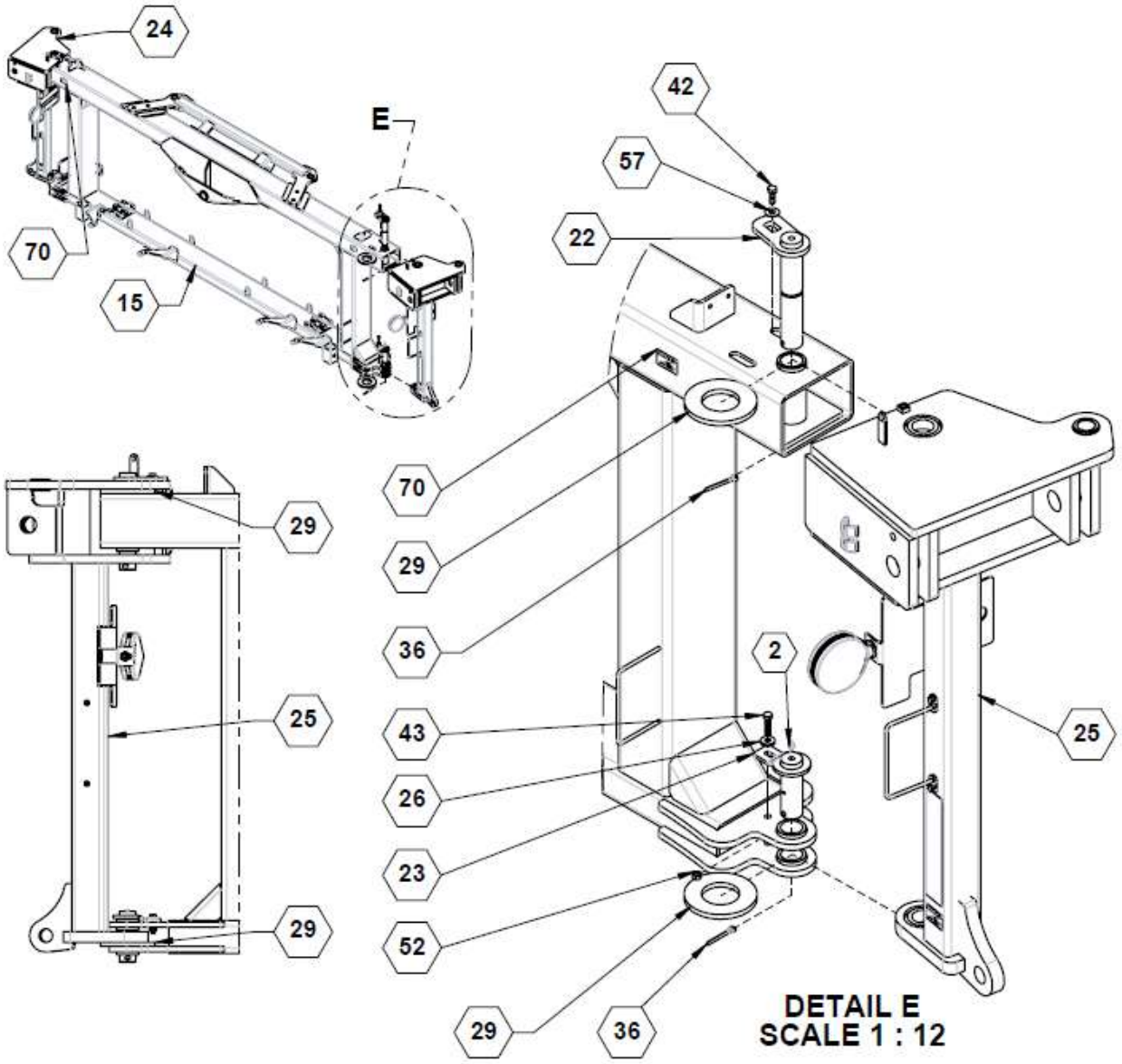

Parts List 36699: Truss Boom Center Section with Hinges

ITEM	PART NO.	QTY.	DESCRIPTION
2	**759**	2	ZERK, 1/4-28 STRAIGHT PIPE THREAD
15	**22005**	1	WLDMNT, TRUSS CENTER SECTION
22	**35566**	2	WLDMT, SENSOR PIN
23	**35568**	2	WLDMNT, LOWER PIVOT PIN
24	**36713L**	1	ASSEMBLY, CENTER HINGE, LEFT
25	**36713R**	1	ASSEMBLY, CENTER HINGE, RIGHT
26	**530309**	2	WASHER, 1.00 OD X .406 ID X .188, MAGNI
29	**590038**	4	WASHER, 2 5/8" ID THRUST
36	**590403**	4	COTTER PIN, 1/4" X 2"
42	**596128M**	2	BOLT, HH 3/8-16 X 1 GR5 MAGNI
43	**596129M**	2	BOLT, HH 3/8-16X1-1/2 GR5 MAGNI
52	**596237M**	2	NUT, CENTERLOCK 3/8-16 MAGNI
57	**596258M**	2	WASHER, FLAT 3/8 MAGNI
70	**800287**	2	DECAL, GREASE PIVOT POINTS

Truss Boom Center Section with Hinges (continued)

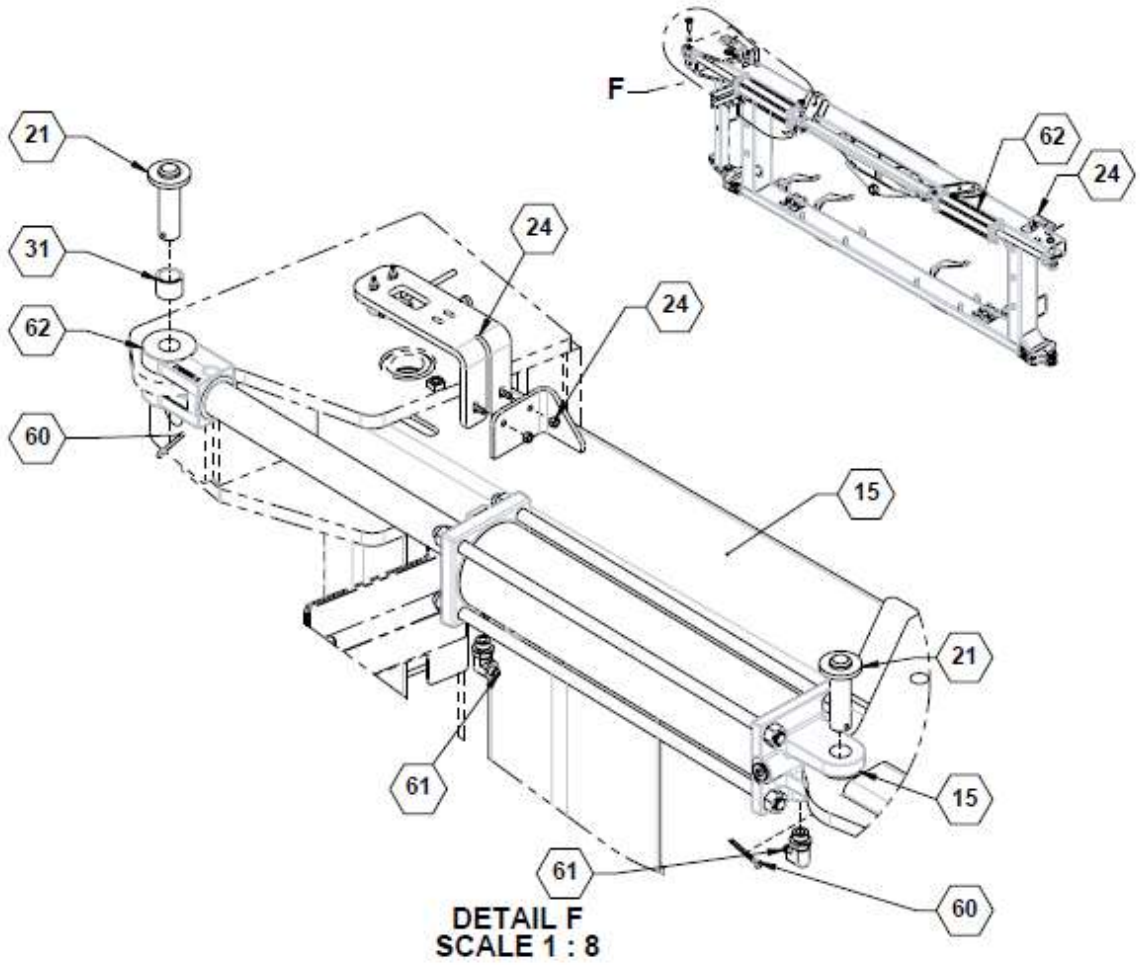

Parts List 36699: Truss Boom Center Section with Hinges

ITEM	PART NO.	QTY.	DESCRIPTION
15	**22005**	1	WLDMNT, TRUSS CENTER SECTION
21	**28111**	4	PIN WLDMNT, 1.00 CYL PIN
24	**36707**	2	ASSEMBLY, ROTATION SENSOR
31	**590248**	4	SLEEVE BEARING, 1.00ID, 1.25OD, 1.00LG, CAST BRONZE
60	**596808M**	4	COTTER PIN, 3/16 X 2" MAGNI
61	**610029**	4	ADAPTER, -4MJIC X -8MORB90
62	**620077**	2	CYLINDER, 4 X 18"

Truss Boom Center Section with Hinges (continued)

FOR 132FT BOOMS ONLY

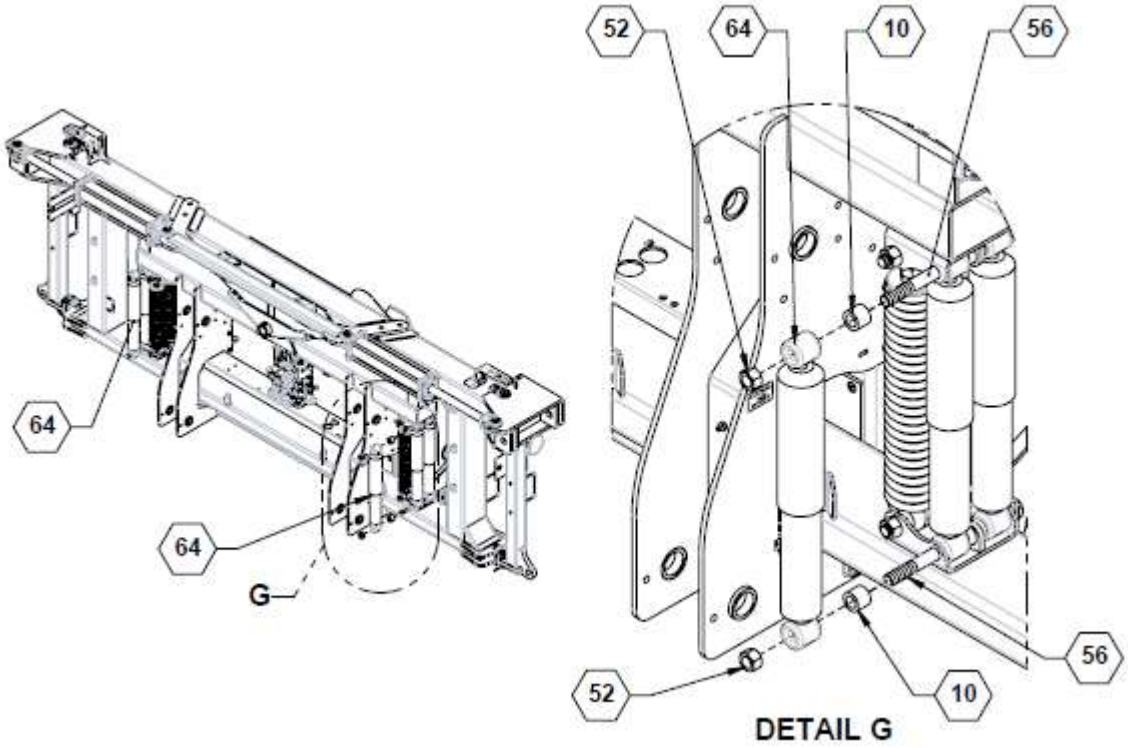

Parts List 36699: Truss Boom Center Section with Hinges

ITEM	PART NO.	QTY.	DESCRIPTION
10	**18357**	4	DOM, SPACER
52	**596241M**	8	NUT, CENTERLOCK 3/4-10 MAGNI
56	**596489M**	4	BOLT, 3/4-10 X 10 MAGNI
64	**790010**	6	SHOCK, YELLOW 7400 120’ CENTER

Truss Boom Inner Center to P-Link

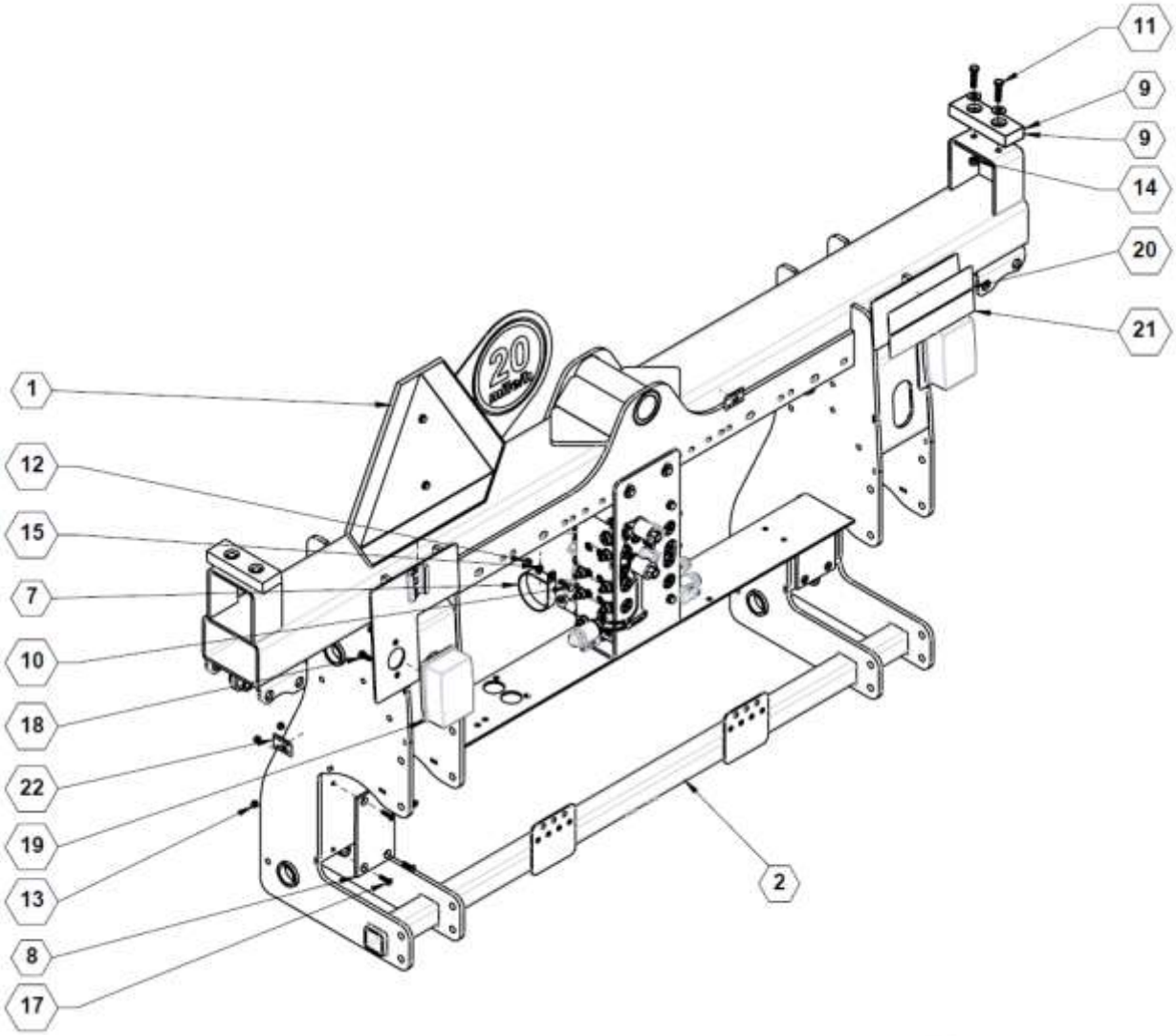

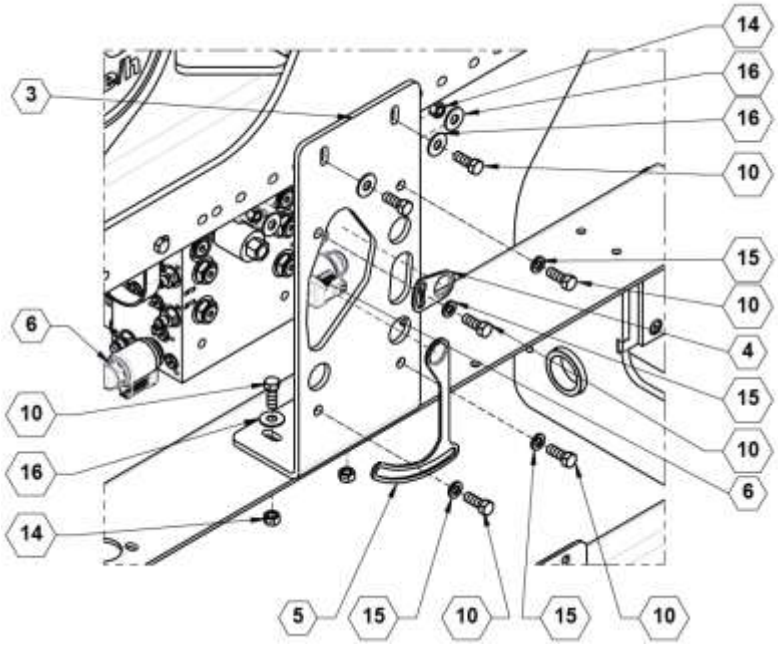

Parts List 36712: Truss Boom Inner Center to P-Link

ITEM	PART NO.	QTY.	DESCRIPTION
1	**90SASMV**	1	SMV ASSEMBLY
2	**16320**	1	PIVOT, CENTER, PASSIVE
3	**18389**	1	PLATE, MOUNT, RAVEN
4	**21496**	1	PLATE, CARTRIDGE LOCK
5	**21497**	1	PLATE, CARTRIDGE LOCK
6	**36711**	1	ASSEMBLY, HYD BLOCK W/ FITTINGS
7	**540052**	2	P-CLAMP, 3" W/3/8" HOLE
8	**590079**	2	RUB PLATE
9	**590094**	2	BUMPER PAD, 6" LG
10	**596128M**	10	BOLT, HH 3/8-16 X 1 GR5 MAGNI
11	**596129M**	4	BOLT, HH 3/8-16X1-1/2 GR5 MAGNI
12	**596213M**	2	NUT, HEX 3/8-16 MAGNI
13	**596227M**	8	NUT, HEX NYLOCK 1/4-20 MAGNI
14	**596237M**	8	NUT, CENTERLOCK 3/8-16 MAGNI
15	**596250M**	6	LOCKWASHER, 3/8 MAGNI
16	**596258M**	10	WASHER, FLAT 3/8 MAGNI
17	**596630M**	8	FHSCS 1/4-20 X 1 MAGNI
18	**596737M**	4	BOLT, HH 8-1.25 X 20MM 8.8 MAGNI
19	**740025**	2	LIGHT, RED SURF MNT ASSY
20	**800109**	1	DECAL, RED REFLECTOR
21	**800111**	1	DECAL, NON-REFLECTIVE, ORANGE
22	**800287**	3	DECAL, GREASE PIVOT POINTS

Cradle Centering Spring Assembly

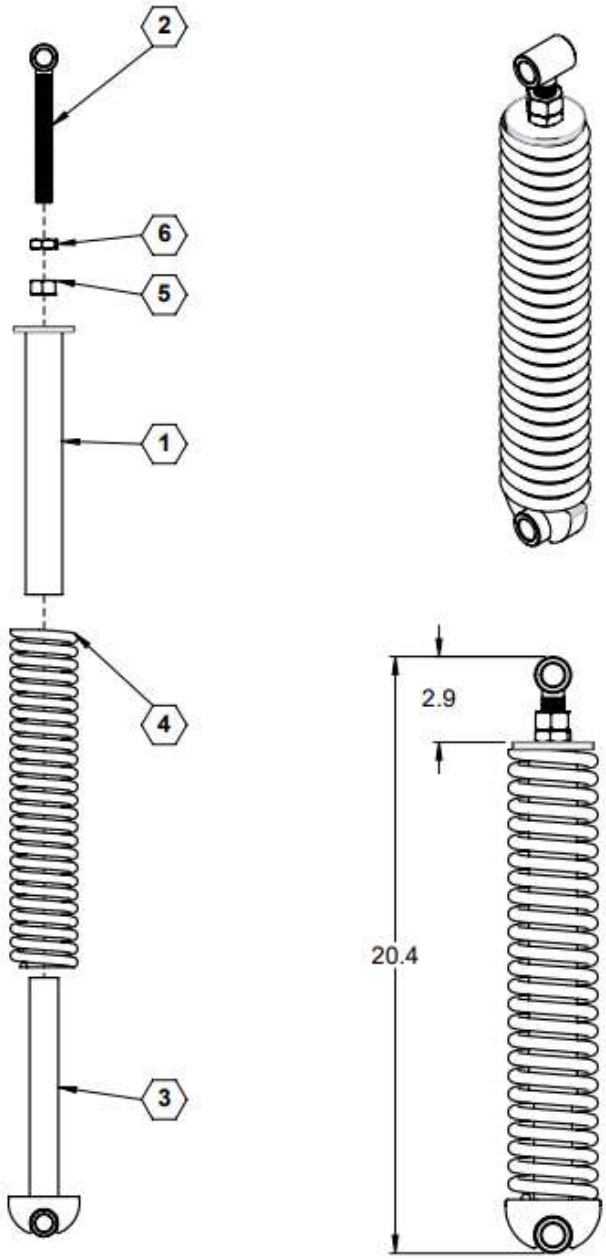

Parts List 28360: Cradle Centering Spring Assembly

ITEM	PART NO.	QTY.	DESCRIPTION
1	**7442**	1	OUTER SPRING GUIDE
2	**7444**	1	SPRING ADJUSTMENT EYEBOLT
3	**11620**	1	BASE SPRING MT
4	**590011**	1	CENTER SECTION SPRING
5	**596217M**	1	NUT, HEX 3/4-10 G5 MAGNI
6	**596225M**	1	NUT, HEX JAM 3/4-10 GR8 MAGNI

Truss Boom 120’ / 132’ Wing

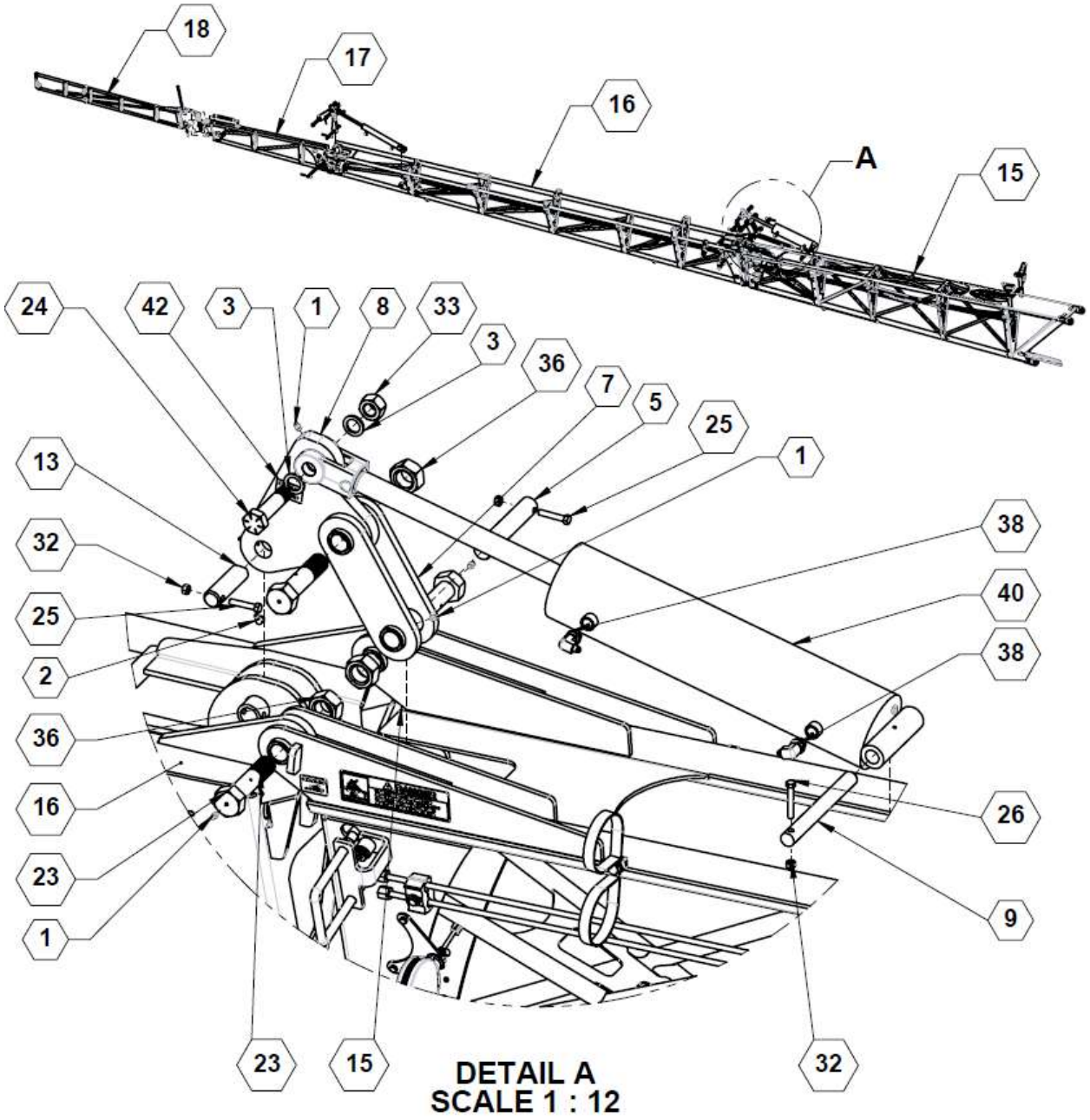

Truss Boom 120’ / 132’ Wing (continued)

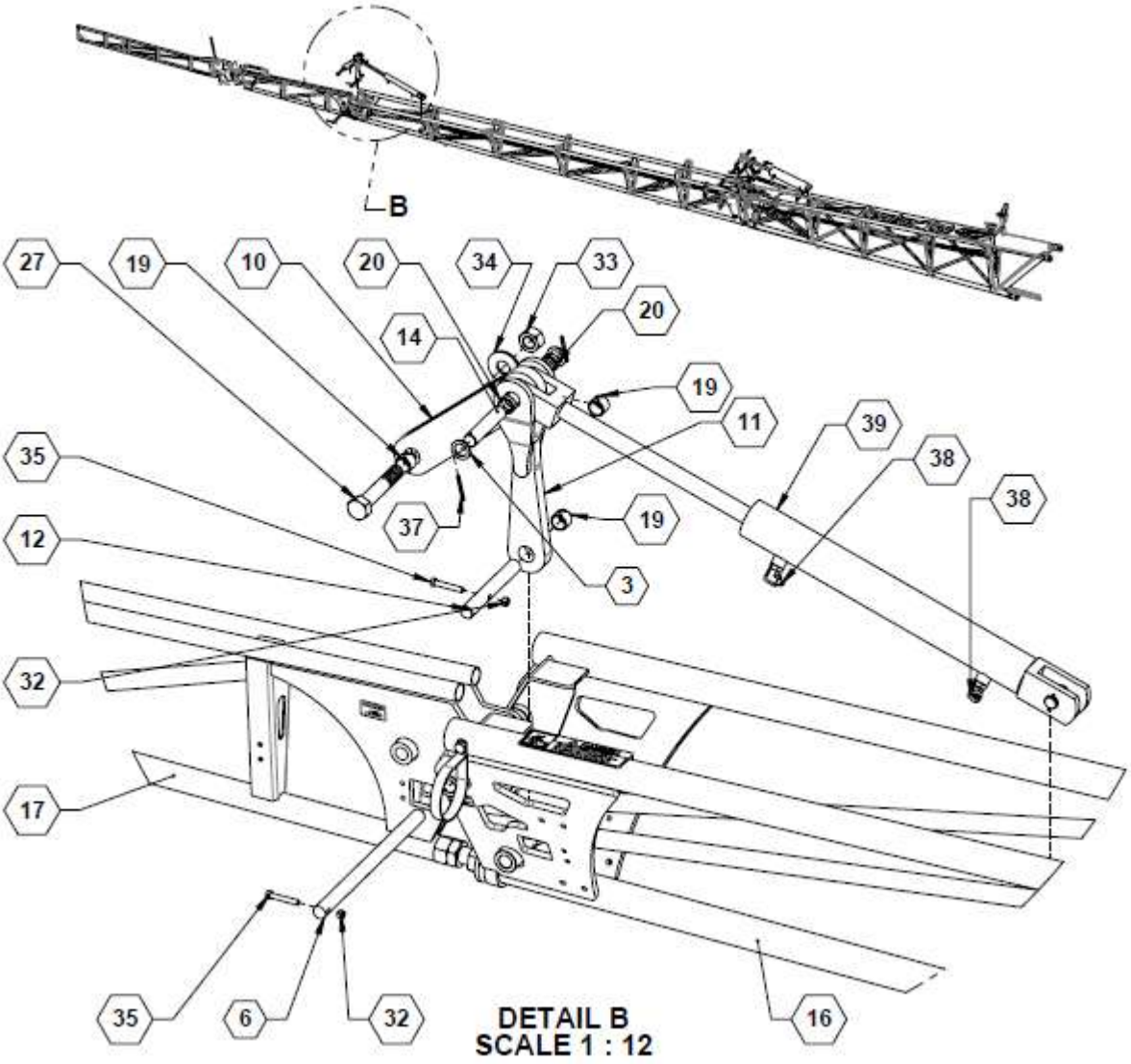

Truss Boom 120’ / 132’ Wing (continued)

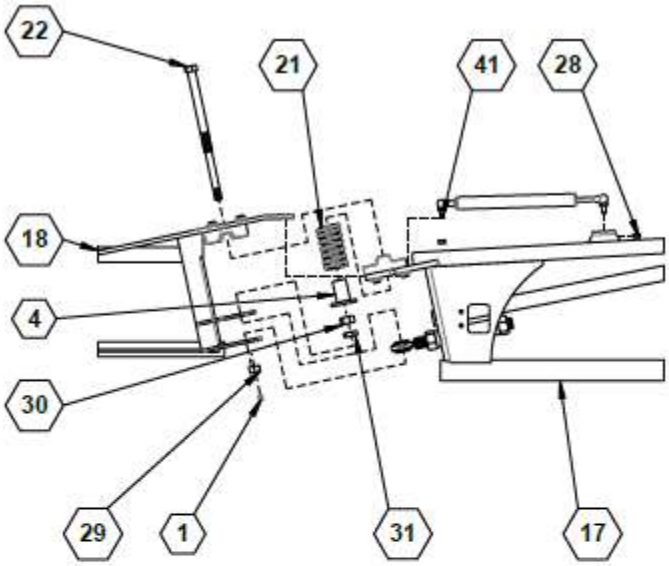

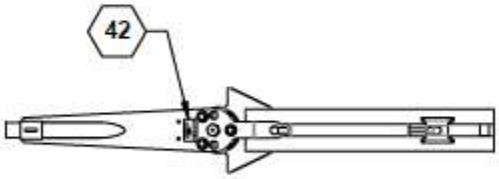

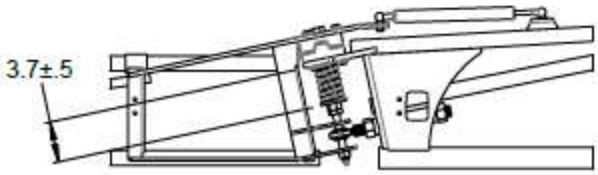

Parts List 36705 / 36755: Truss Boom 120’ / 132’ Wing

ITEM	PART NO.	QTY.	DESCRIPTION
1	**759**	7	ZERK, 1/4-28 STRAIGHT PIPE THREAD
2	**761**	1	ZERK, 90~, 1/4-28 STRAIGHT PIPE THREAD
3	**787**	4	WASHER, 1" ID X 10GA
4	**14013**	1	SPRING GUIDE
5	**16149**	1	PIN, 1 1/4" X 6 7/8"LG.
6	**16151**	1	PIN, 2ND FLIP
7	**16197**	1	LINK, SCISSOR WELDMENT
8	**16198**	1	LINK, SCISSOR
9	**16268**	1	PIN, CYL, MAIN WING
10	**16297**	1	LINK, SCISSOR, 2ND FLIP

ITEM	PART NO.	QTY.	DESCRIPTION
11	**16298**	1	LINK, SCISSOR, 2ND FLIP
12	**18292**	1	PIN, 1" X 7.5" LG
13	**21076**	1	PIN, FLIP LINKAGE
14	**28112**	1	PIN, CYLINDER, 1.00"
15	**36701**	1	BOOM 120, WING 1
	36751		BOOM 132, WING 1
16	**36702**	1	BOOM 120, WING 2
	36752		BOOM 132, WING 2
17	**36703**	1	BOOM 120, WING 3
	36753		BOOM 132, WING 3
18	**36704**	1	BOOM 120, WING 4
	36754		BOOM 132, WING 4
19	**530281**	4	SPRING BUSHING 1" I.D.
20	**530284**	2	BUSHING 1.25OD X 1 ID X 1/2"L
21	**590006**	1	SPRING, COMPRESSION
22	**590112**	1	BOLT, BREAKAWAY
23	**590183**	3	BOLT, 1-1/4" X 5" MACHINED
24	**590815**	1	BOLT, 1 X 4", GR8
25	**596130M**	2	BOLT, HH 3/8-16 X 2 GR5 MAGNI
26	**596131M**	1	BOLT, HH 3/8-16 X 2-1/2 GR5 MAGNI
27	**596205M**	1	BOLT, HEX 1-8 X 5-1/2 GR5 MAGNI
28	**596213M**	2	NUT, HEX 3/8-16 MAGNI
29	**596216M**	1	NUT, HEX 5/8-11 MAGNI
30	**596217M**	1	NUT, HEX 3/4-10 G5 MAGNI
31	**596225M**	1	NUT, HEX JAM 3/4-10 GR8 MAGNI
32	**596237M**	5	NUT, CENTERLOCK 3/8-16 MAGNI
33	**596242M**	2	NUT, CENTERLOCK, 1" MAGNI
34	**596276M**	1	WASHER, FLAT 1" MAGNI
35	**596636M**	2	BOLT, HH 3/8-16 X 2-1/4 GR5 MAGNI
36	**596724M**	3	NUT, CENTERLOCK, 1-1/4" MAGNI
37	**596746M**	2	SPRING PIN 5X50mm MAGNI
38	**610029**	4	ADAPTER, -4MJIC X -8MORB90
39	**620036**	1	TRUSS SECONDARY FLIP
40	**620043**	1	CYL., 5X16 CUSHIONED
41	**790028**	1	SHOCK, BREAKAWAY, HEAVY
42	**800287**	2	DECAL, GREASE PIVOT POINTS

Truss Boom 120' / 132' Wing 1

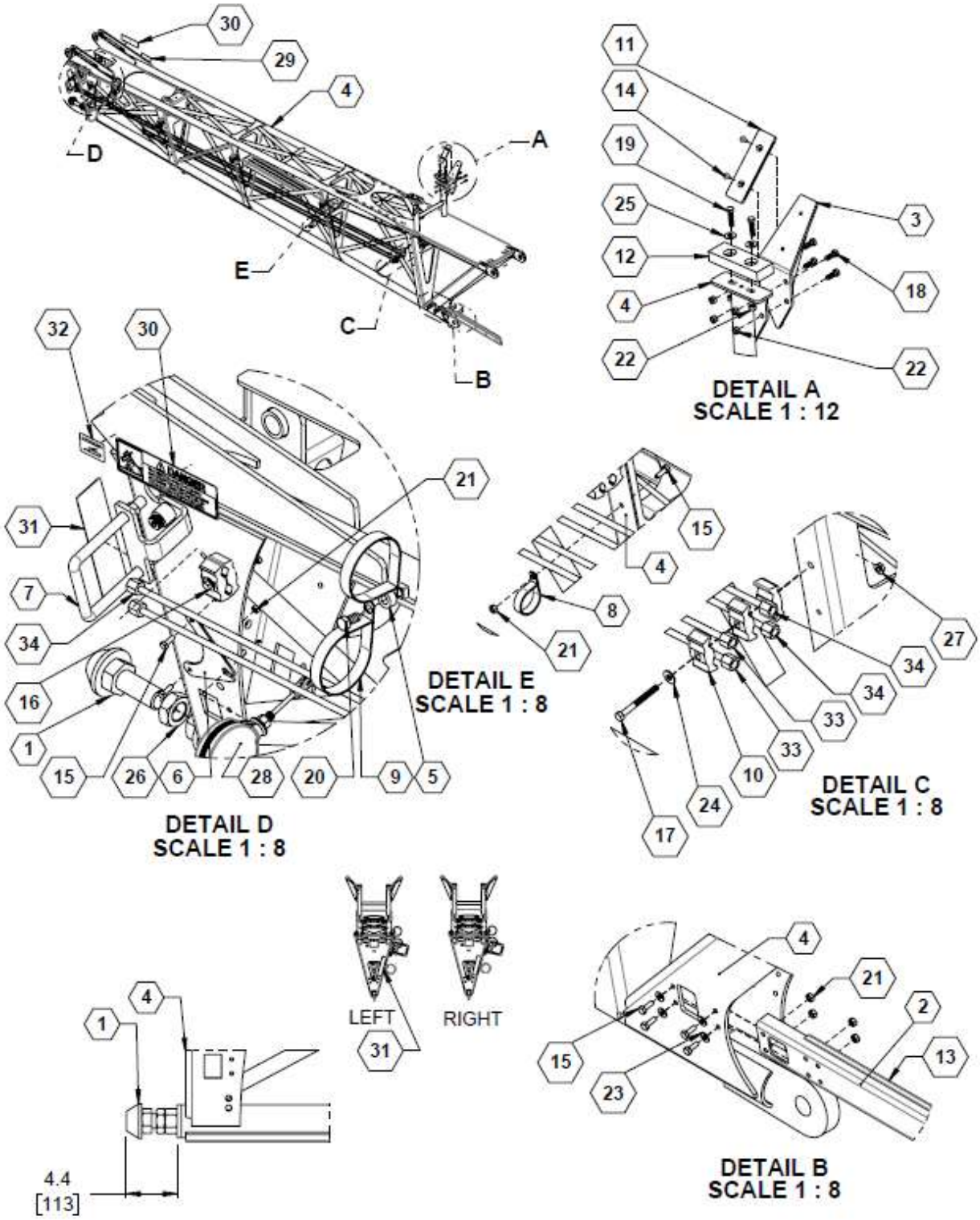

Parts List 36701 / 36751: Truss Boom 120’ / 132’ Wing 1

ITEM	PART NO.	QTY.	DESCRIPTION
1	**16185**	1	CONE, 3X1 3/8 WELD
2	**16378**	1	MOUNT BRACKET
3	**16794**	2	GUIDE, WING REST, BOLT-ON
4	**28920**	1	WING, MAIN, TRUSS BOOM
5	**36221**	1	PLATE, THICC WASHER
6	**36592**	1	PLATE, BOOM LIGHT BRACKET
7	**37532**	1	ASSEMBLY, SWIVELING HOSE CLAMP
8	**540048**	1	CLAMP, LOOP, 1.50, .50 WIDE, W/ .281 HOLE, VINYL COATED
9	**540054**	2	P-CLAMP, 4" W/1/2" HOLE
10	**540077**	14	CLAMP TWIN AG 2 STAUFF
11	**590024**	2	PLASTIC TRANSPORT
12	**590094**	2	BUMPER PAD, 6" LG
13	**590459**	2.5	(FT) TRIM, EDGE GUARD 1/4
14	**590581**	4	RIVET, POUND IN, 1/4 X 7/16
15	**596101M**	7	BOLT, HH 1/4-20 X 3/4 GR5 MAGNI
16	**596118M**	1	BOLT, HH 5/16-18 X 2-1/2 GR5 MAGNI
17	**596119M**	4	BOLT, HH 5/16-18 X 3 GR5 MAGNI
18	**596128M**	8	BOLT, HH 3/8-16 X 1 GR5 MAGNI
19	**596129M**	4	BOLT, HH 3/8-16X1-1/2 GR5 MAGNI
20	**596152M**	1	BOLT, HH 1/2 X 1 GR5 MAGNI
21	**596235M**	7	NUT, CENTERLOCK, 1/4-20 MAGNI
22	**596237M**	12	NUT, CENTERLOCK 3/8-16 MAGNI
23	**596256M**	4	WASHER, FLAT 1/4 USS MAGNI
24	**596257M**	5	WASHER, FLAT 5/16 USS MAGNI
25	**596258M**	4	WASHER, FLAT 3/8 MAGNI
26	**596722M**	1	NUT, HEX 1-1/4 -7 UNC JAM MAGNI
27	**596768M**	5	NUT, HEX FLANGE 5/16-18 MAGNI
28	**740024**	1	LIGHT, AMBER WARNING
29	**800020**	1	DECAL, FAST LOGO BLK/GRY
30	**800106**	2	DECAL, DANGER-STAND CLEAR
31	**800110**	1	DECAL, AMBER, REFLECTOR
32	**800287**	1	DECAL, GREASE PIVOT POINTS
33	**FDM P603**	2	FAST DIST. 125.5" STRAIGHT TUBE, FLARED
34	**FDM P604**	2	FAST DIST. 162" STRAIGHT TUBE, FLARED

Truss Boom 120’ / 132’ Wing 2

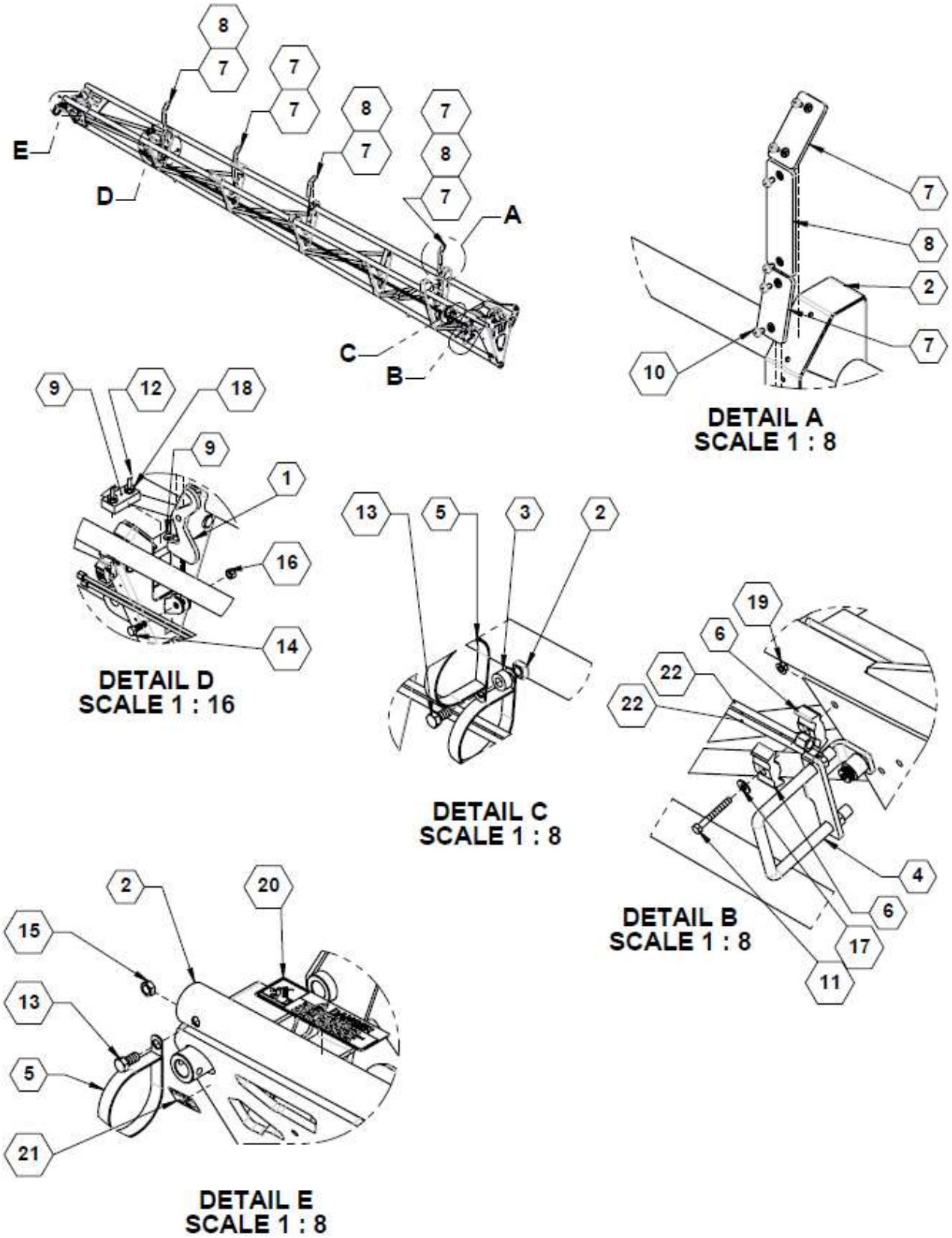

Parts List 36702: Truss Boom 120’ / 132’ Wing 2

ITEM	PART NO.	QTY.	DESCRIPTION
1	**16143**	1	LATCH, OVERCENTER, 120 FT
2	**18276**	1	WING, PRIMARY FLIP
3	**36221**	1	PLATE, THICC WASHER
4	**37532**	1	ASSEMBLY, SWIVELING HOSE CLAMP
5	**540054**	3	P-CLAMP, 4" W/1/2" HOLE
	37529BLK	1	PLATE, HOSE CONTROL (REQUIRES (1) 590186 U-BOLT)
6	**540077**	12	CLAMP TWIN AG 2 STAUFF
7	**590109**	12	PAD, RUB, SHORT
8	**590110**	6	PAD, RUB, LONG
9	**590184**	2 (120’)	PAD, WING REST
		1 (132’)	
10	**590581**	36	RIVET, POUND IN, 1/4 X 7/16
11	**596118M**	6	BOLT, HH 5/16-18 X 2-1/2 GR5 MAGNI
12	**596128M**	2	BOLT, HH 3/8-16 X 1 GR5 MAGNI
	596130M		BOLT, HH 3/8-16 X 2 GR5 MAGNI
13	**596152M**	2	BOLT, HH 1/2 X 1 GR5 MAGNI
14	**596172M**	1	BOLT, HH 5/8-11 X 1-3/4 GR5 MAGNI
15	**596223M**	1	NUT, HEX JAM 1/2-13 MAGNI
16	**596240M**	1	NUT, CENTERLOCK, 5/8-11 MAGNI
17	**596257M**	6	WASHER, FLAT 5/16 USS MAGNI
18	**596258M**	2	WASHER, FLAT 3/8 MAGNI
19	**596768M**	5	NUT, HEX FLANGE 5/16-18 MAGNI
20	**800106**	1	DECAL, DANGER-STAND CLEAR
21	**800287**	1	DECAL, GREASE PIVOT POINTS
22	**FDM P605**	2	FAST DIST. 203" STRAIGHT TUBE, FLARED

Truss Boom 120’ / 132’ Wing 3

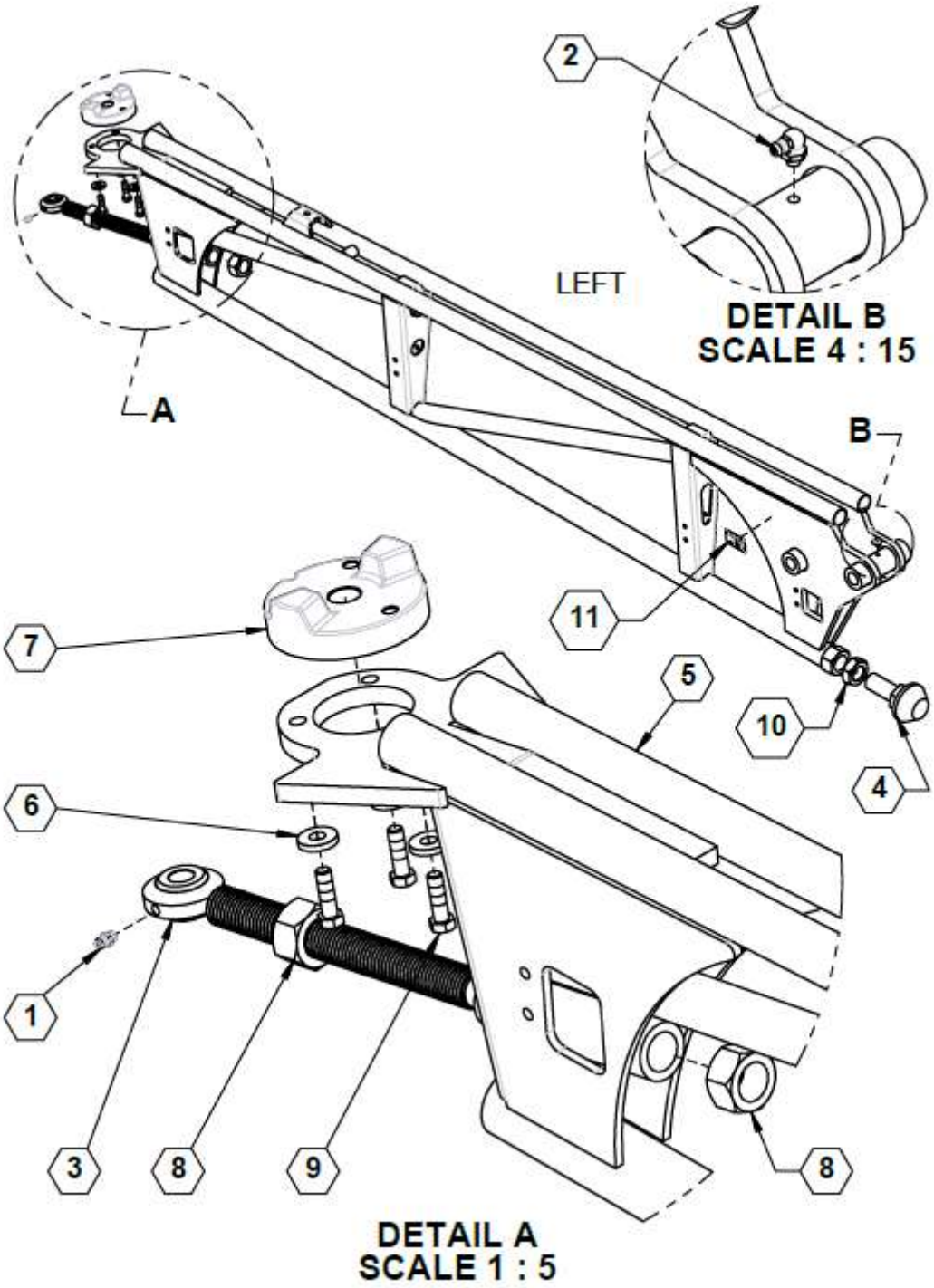

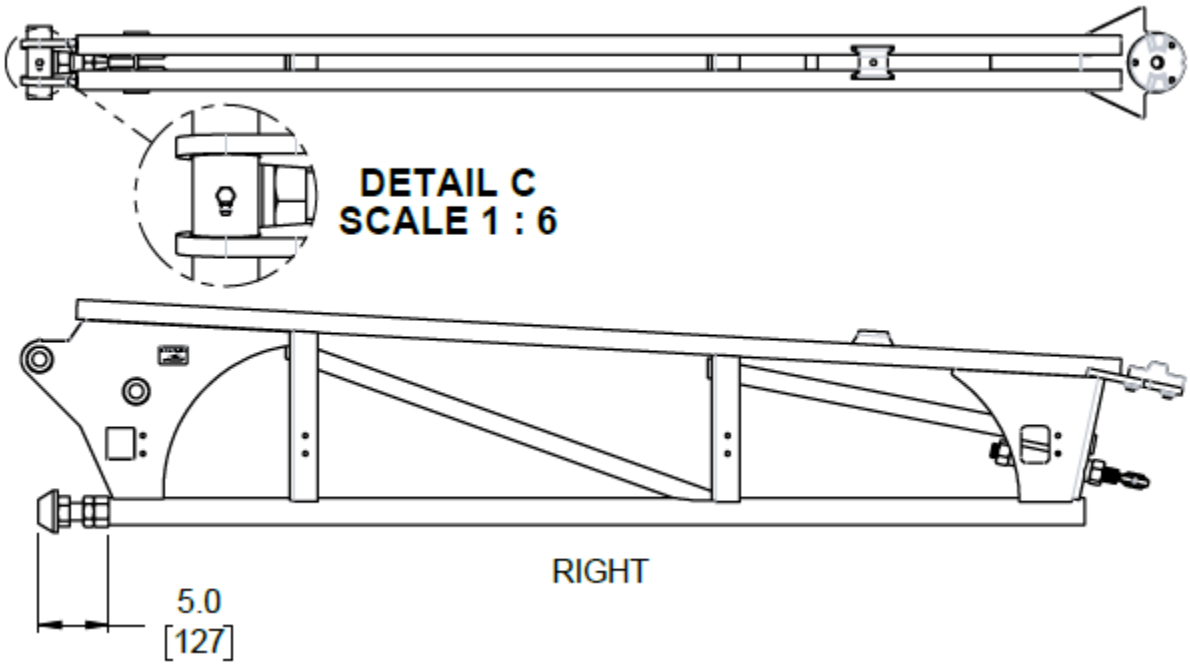

Parts List 36703 / 36753: Truss Boom 120' / 132' Wing 3

ITEM	PART NO.	QTY.	DESCRIPTION
1	**759**	1	ZERK, 1/4-28 STRAIGHT PIPE THREAD
2	**761**	1	ZERK, 90°, 1/4-28 STRAIGHT PIPE THREAD
3	**16176**	1	SUPPORT, BRKWAY, ADJ.
4	**16185**	1	CONE, 3X1 3/8 WELD
5	**16280**	1	WLDMNT, SECONDARY FLIP
	16290		WING, 2ND FLIP, 132'
6	**530309**	3	WASHER, 1.00 OD X .406 ID X .188, MAGNI
7	**590073**	1	CLUTCH, MALE 20~
	18400		CLUTCH, WITH CENTERING STOP (132' ONLY)
8	**596218M**	2	NUT, HEX 1-8 MAGNI
9	**596633M**	3	BOLT, HH 3/8-24 X 1-1/4 GR5 MAGNI
10	**596722M**	1	NUT, HEX 1-1/4 -7 UNC JAM MAGNI
11	**800287**	1	DECAL, GREASE PIVOT POINTS

Truss Boom 120' Wing 4

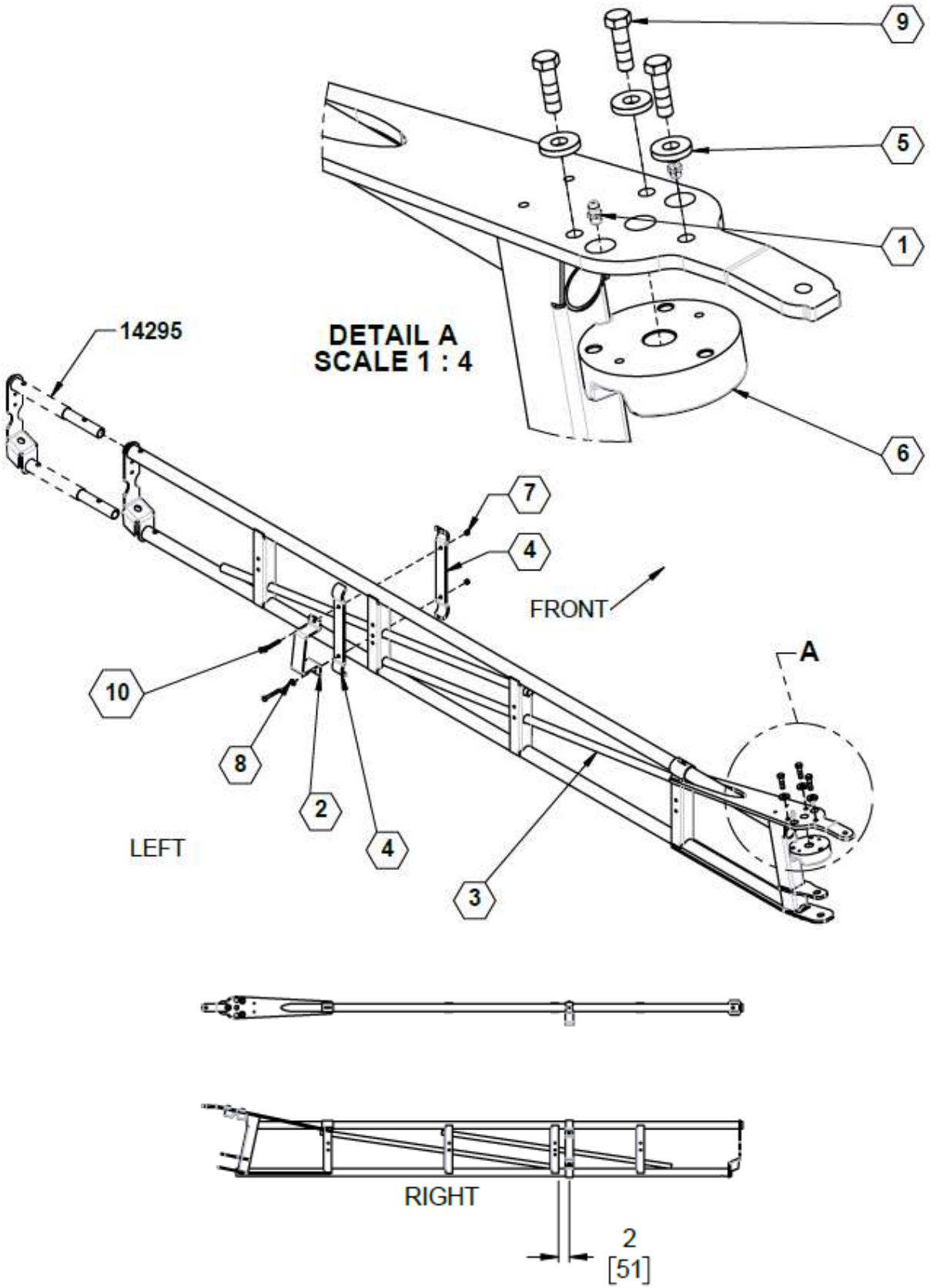

Parts List 36704: Truss Boom 120’ Wing 4

ITEM	PART NO.	QTY.	DESCRIPTION
1	**759**	2	ZERK, 1/4-28 STRAIGHT PIPE THREAD
2	**16671**	1	GUIDE, BREAKAWAY
3	**18300**	1	WLDMNT, 93" BREAKAWAY
4	**18315**	2	CLAMP, FORMED, 1 3/8
5	**530309**	3	WASHER, 1.00 OD X .406 ID X .188, MAGNI
6	**590074**	1	CLUTCH, FEMALE 20~
7	**596235M**	2	NUT, CENTERLOCK, 1/4-20 MAGNI
8	**596256M**	1	WASHER, FLAT 1/4 USS MAGNI
9	**596633M**	3	BOLT, HH 3/8-24 X 1-1/4 GR5 MAGNI
10	**596848M**	2	BOLT, HH 1/4-20 X 2 GR5 MAGNI

Truss Boom 132' Wing 4

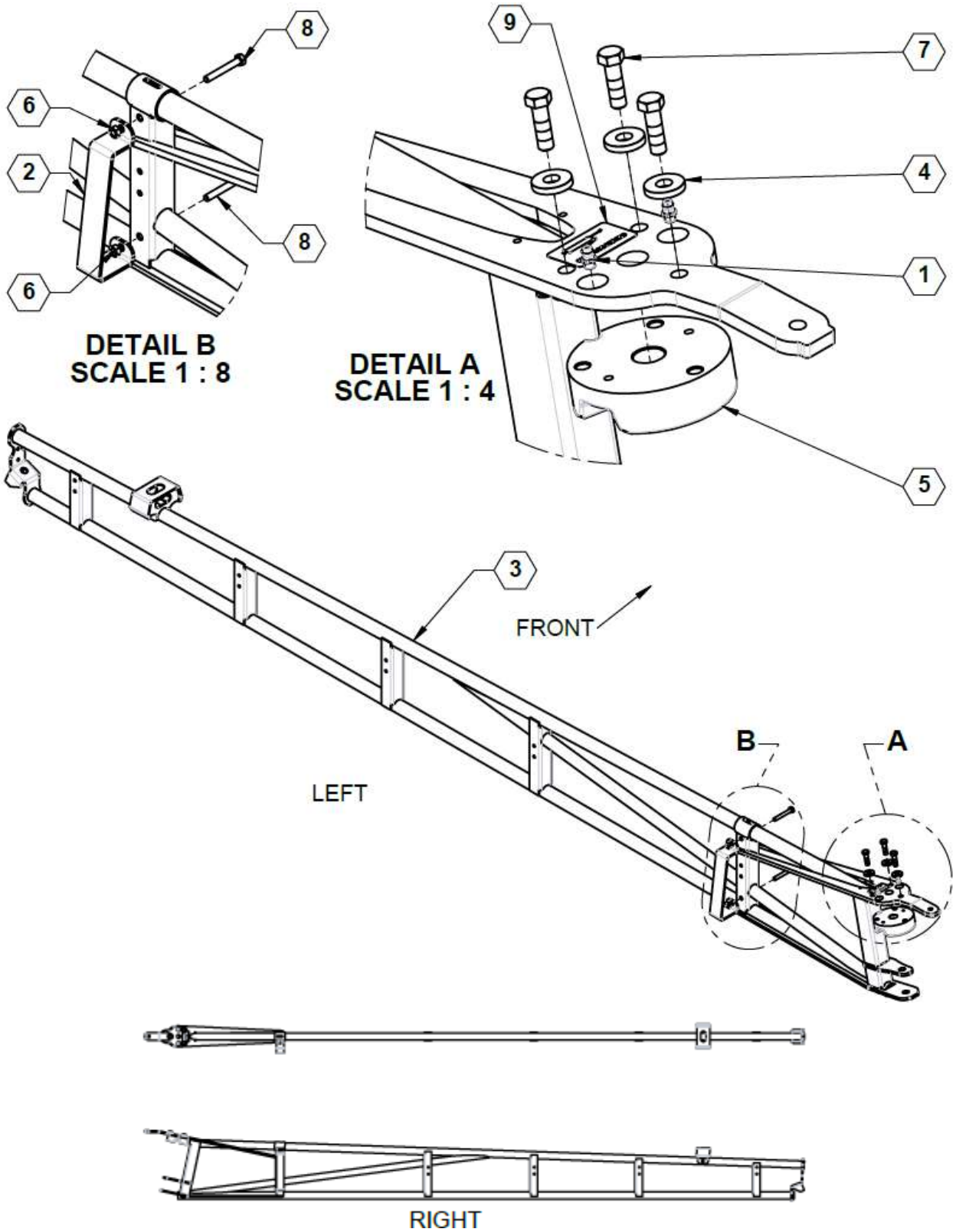

Parts List 36754: Truss Boom 132’ Wing 4

ITEM	PART NO.	QTY.	DESCRIPTION
1	**759**	2	ZERK, 1/4-28 STRAIGHT PIPE THREAD
2	**16180**	1	GUIDE, BREAKAWAY
3	**14000**	1	BREAKAWAY TAPERED
4	**530309**	3	WASHER, 1.00 OD X .406 ID X .188, MAGNI
5	**590074**	1	CLUTCH, FEMALE 20~
6	**596236M**	2	NUT, CENTERLOCK, 5/16-18 MAGNI
7	**596633M**	3	BOLT, HH 3/8-24 X 1-1/4 GR5 MAGNI
8	**596632M**	2	BOLT, HH 5/16 X 2-1/4 GR5 MAGNI
9	**800287**	1	DECAL, GREASE PIVOT POINTS

Boom Routing Swiveling Hose Clamp

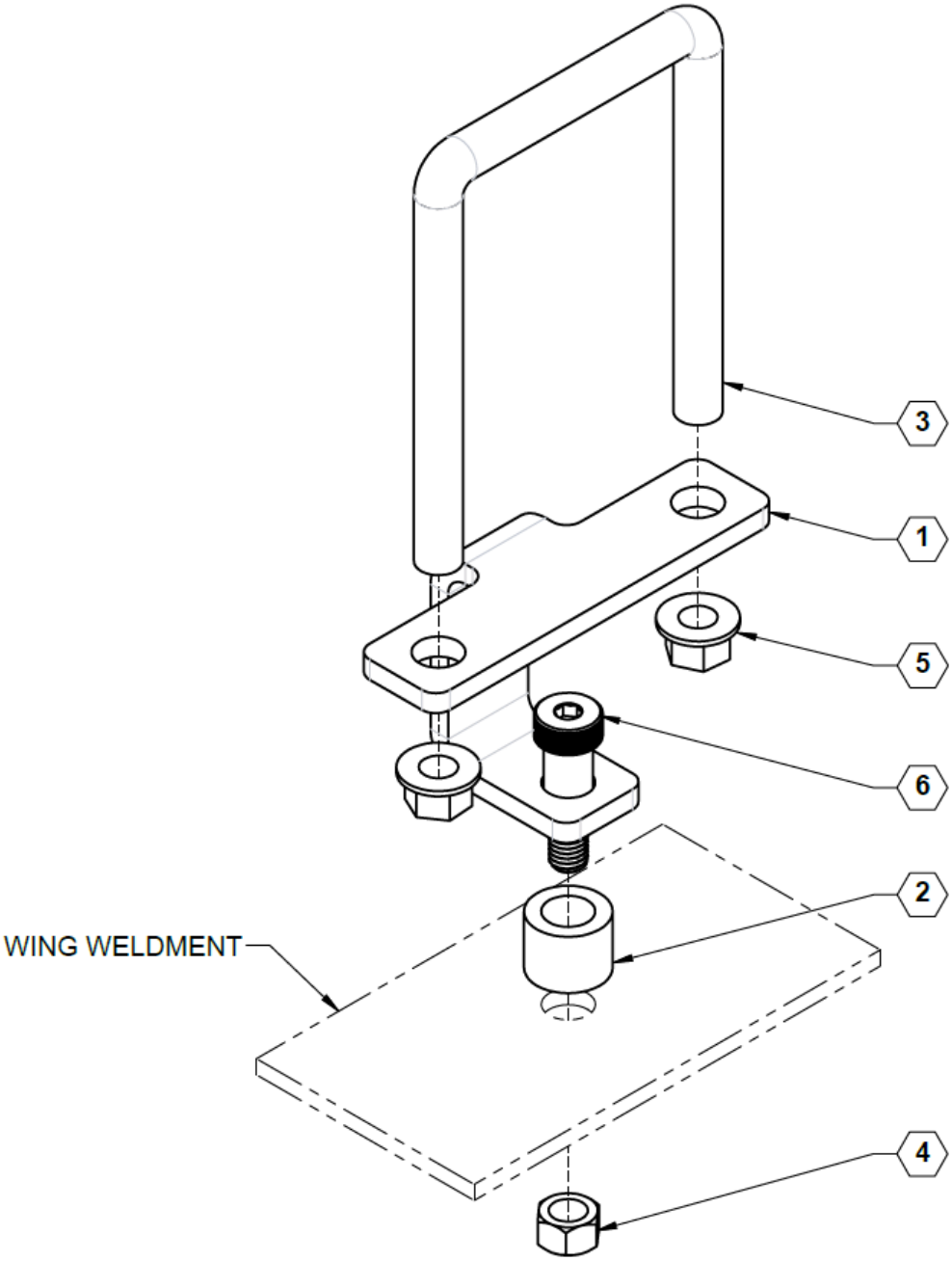

Parts List 37532: Boom Routing Swiveling Hose Clamp

ITEM	PART NO.	QTY.	DESCRIPTION
1	**37529**	1	PLATE, HOSE CONTROL
2	**37530**	1	SPACER, HOSE CONTROL
3	**590186**	1	U-BOLT, 5/8 X 4 X 5-3/4
4	**596239M**	1	NUT, CENTERLOCK, 1/2-13 MAGNI
5	**596771M**	2	NUT, HEX FLANGE 1/2-13 MAGNI
6	**596846M**	1	BOLT, SHOULDER, 5/8 X 1-1/4" MAGNI

Boom P-Links & Accumulator

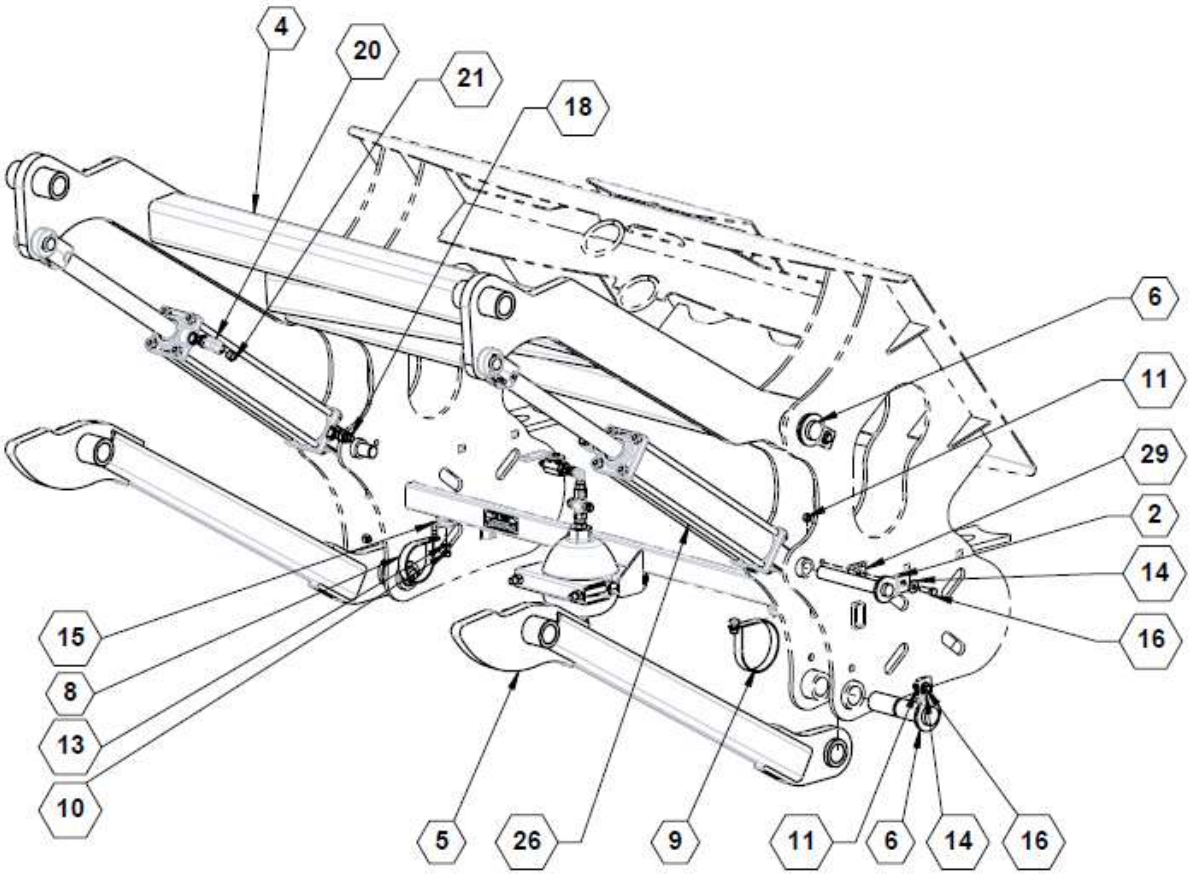

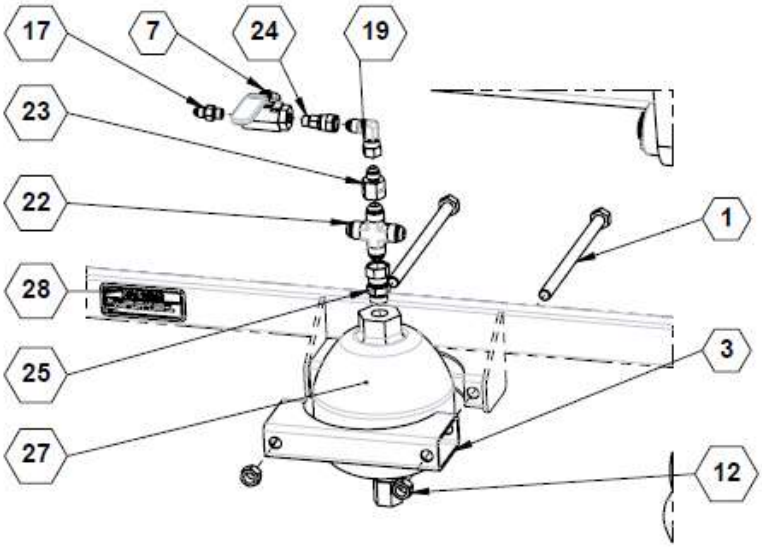

Parts List 36706: Boom P-Links & Accumulator

ITEM	PART NO.	QTY.	DESCRIPTION
1	**166**	2	Bolt HH 1/2-13 x 8
2	**16331**	2	PIN, LIFT CYLINDER
3	**16654**	1	TUBE, ACCUMULATOR MOUNT
4	**34061**	1	WLDMNT, UPPER LIFTARM
5	**34310**	2	LINK, LOWER WLDMNT
6	**35571**	4	PIN, TRUSS MOUNT
7	**500000**	1	VALVE, BALL SAE#4 FEM PORT
8	**540052**	1	P-CLAMP, 3" W/3/8" HOLE
9	**540053**	1	P-CLAMP, 4" W/3/8" HOLE
10	**596213M**	2	NUT, HEX 3/8-16 MAGNI
11	**596237M**	6	NUT, CENTERLOCK 3/8-16 MAGNI
12	**596239M**	2	NUT, CENTERLOCK, 1/2-13 MAGNI
13	**596250M**	2	LOCKWASHER, 3/8 MAGNI
14	**596258M**	6	WASHER, FLAT 3/8 MAGNI
15	**596592M**	2	BOLT, CARRIAGE 3/8-16 X 1 MAGNI
16	**596635M**	6	BOLT, HH 3/8-16 x 1-1/4 MAGNI
17	**610007**	1	ADAPTER, -4MJIC X -4MORB
18	**610013**	2	ADAPTER, -8MJIC X -8MORB
19	**610023**	1	ADAPTER, -6MJIC X -6FJX 90
20	**610035**	2	ADAPTER, -8MORB X -6FPT 90
21	**610036**	2	BREATHER VENT, PLUG MALE 3/8-18 NPT
22	**610071**	1	ADAPTER, -8 MJIC UNION CROSS
23	**610072**	1	ADAPTER, -8FJIC X -6MJIC
24	**610079**	1	ADAPTER, -4MORB X -6FJX
25	**610083**	1	ADAPTER, -8MORB X -8FJX
26	**620057**	2	CYLINDER, 30THC16.00-150
	620120		CYL., 3.0 X 16.0 X 1.50, WELDED
27	**630020**	1	ACCUMULATOR, 85 CU.
28	**800024**	1	DECAL, REAR LIFT CYLINDER VALVE
29	**800287**	2	DECAL, GREASE PIVOT POINTS

Truss Boom 120’ Touchdown Wheel Option

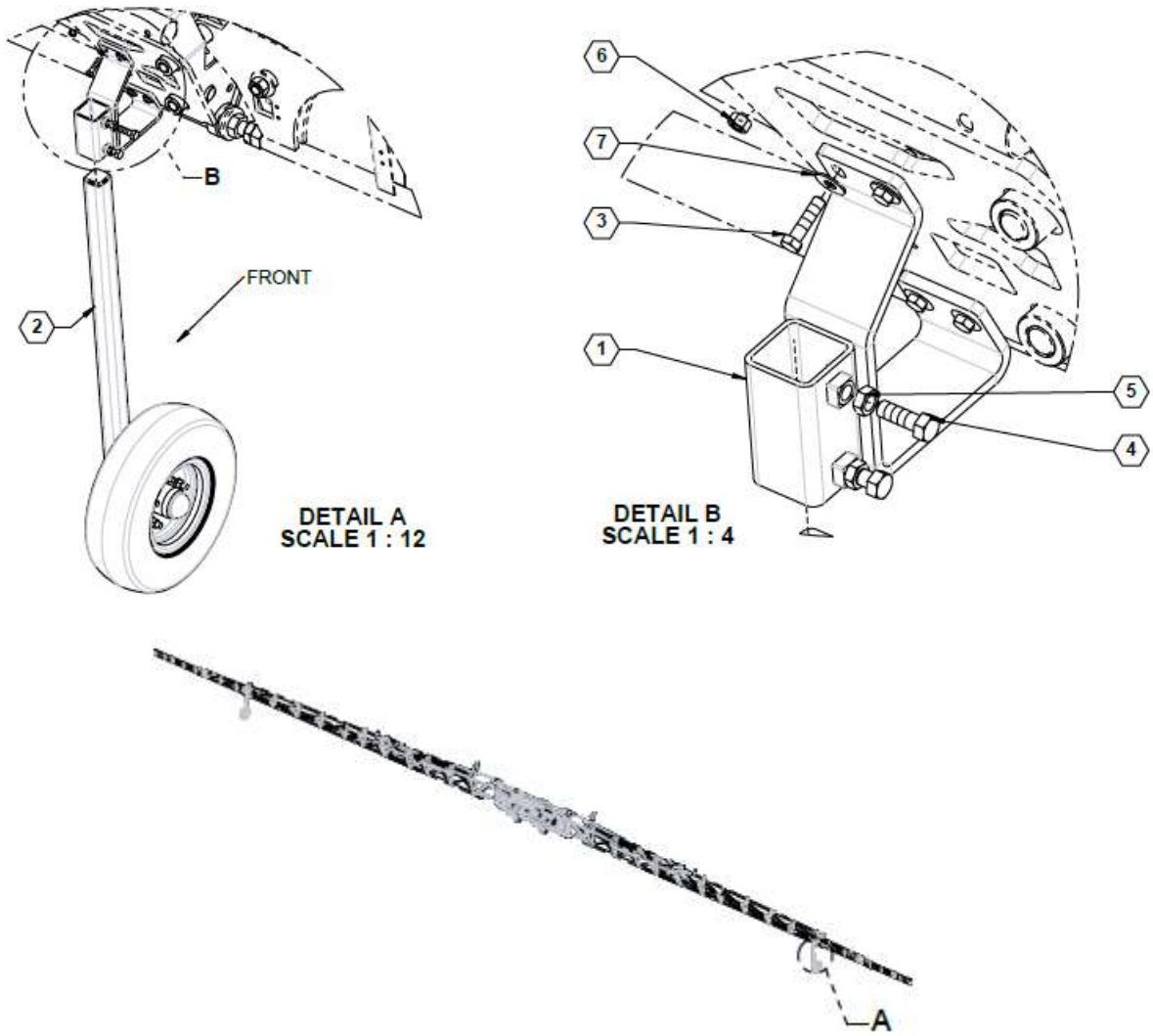

Parts List 99RAUG120WHLKT: Truss Boom 120’ Touchdown Wheel Option

ITEM	PART NO.	QTY.	DESCRIPTION
1	**16655**	2	BRACKET, RAVEN AUTOBOOM
2	**34921**	1	TOUCHDOWN WHEEL ASSEMBLY
3	**596129M**	8	BOLT, HH 3/8-16X1-1/2 GR5 MAGNI
4	**596153M**	4	BOLT, HH 1/2-13X1-1/2 GR5 MAGNI
5	**596223M**	4	NUT, HEX JAM 1/2-13 MAGNI
6	**596237M**	8	NUT, CENTERLOCK 3/8-16 MAGNI
7	**596258M**	8	WASHER, FLAT 3/8 MAGNI

Truss Boom 132’ Touchdown Wheel Option

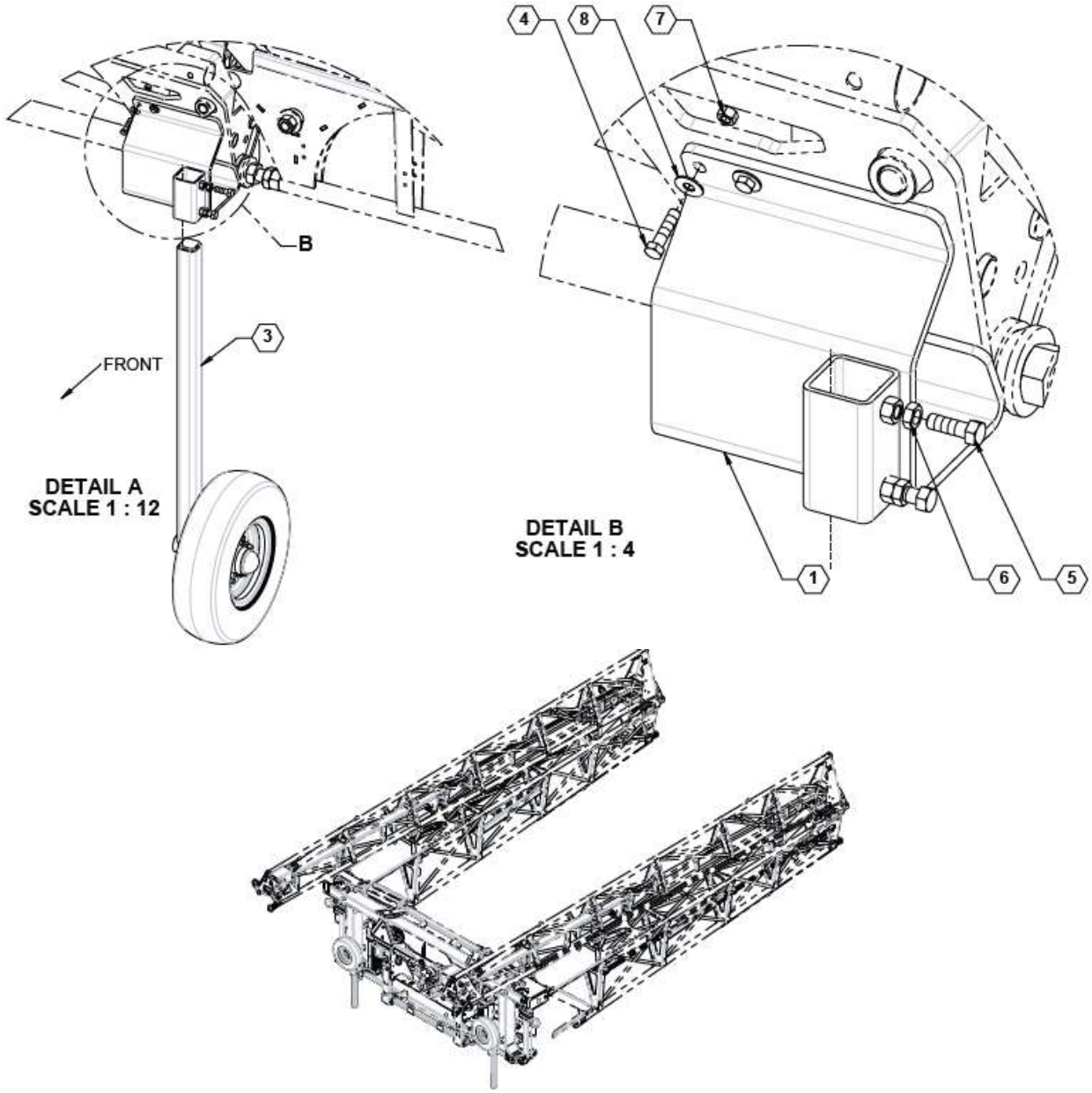

Parts List 99RAUG132WHLKT: Truss Boom 132’ Touchdown Wheel Option

ITEM	PART NO.	QTY.	DESCRIPTION
1	**16684L**	1	BRACKET, RAVEN AUTOBOOM
2	**16684R**	1	BRACKET, RAVEN AUTOBOOM
3	**34921**	1	TOUCHDOWN WHEEL ASSEMBLY
4	**596129M**	8	BOLT, HH 3/8-16X1-1/2 GR5 MAGNI
5	**596153M**	4	BOLT, HH 1/2-13X1-1/2 GR5 MAGNI
6	**596223M**	4	NUT, HEX JAM 1/2-13 MAGNI
7	**596237M**	8	NUT, CENTERLOCK 3/8-16 MAGNI
8	**596258M**	8	WASHER, FLAT 3/8 MAGNI

Touchdown Wheel

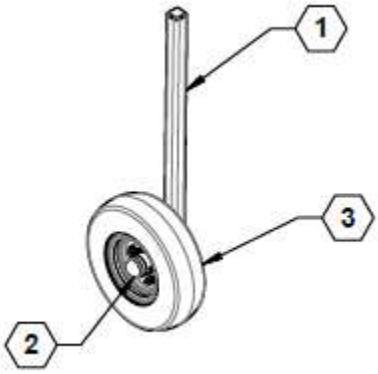

Parts List 34921: Touchdown Wheel

ITEM	PART NO.	QTY.	DESCRIPTION
1	**34920**	2	WELDMENT, TD WHEEL MOUNT
2	**36278**	2	HUB, N545, TURNED DOWN
3	**700215**	2	WHEEL, 4.80-8, CARLISLE

Hub Assembly, Machined to Fit

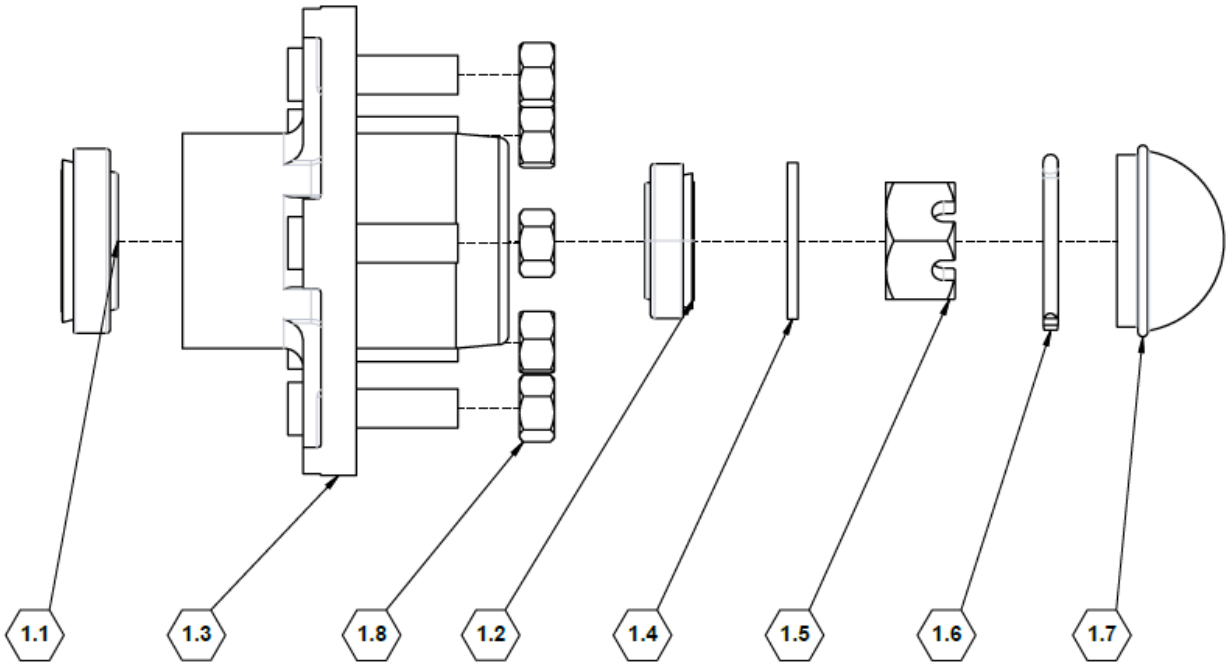

Parts List 36278: Hub Assembly, Machined to Fit

ITEM	PART NO.	QTY.	DESCRIPTION
1	**730125**	1	HUB, N545 - 5 BOLT 4.5IN B.C.
1.1	-	1	BEARING, INNER, L68149-L68111
1.2	-	1	BEARING, OUTER, L44649-L44610
1.3	-	1	HUB, CASTING
1.4	-	1	WASHER
1.5	-	1	NUT, CASTLE 1.00-12
1.6	-	1	COTTER PIN
1.7	-	1	CAP, HUB NI 909900W
1.8	-	5	NUT, HEX 0.50-13

Truss Boom 60’ / 66’ Extension Option

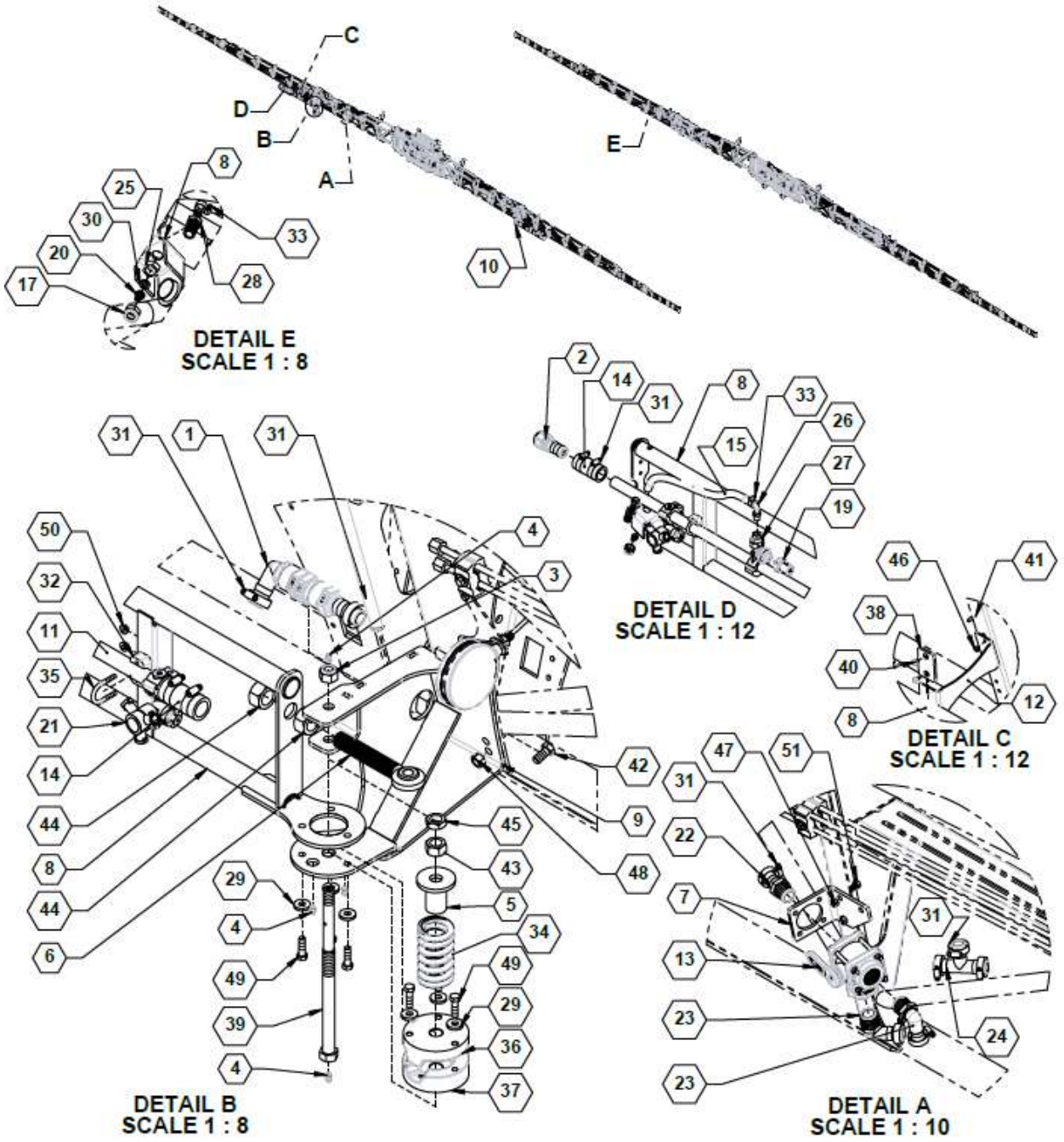

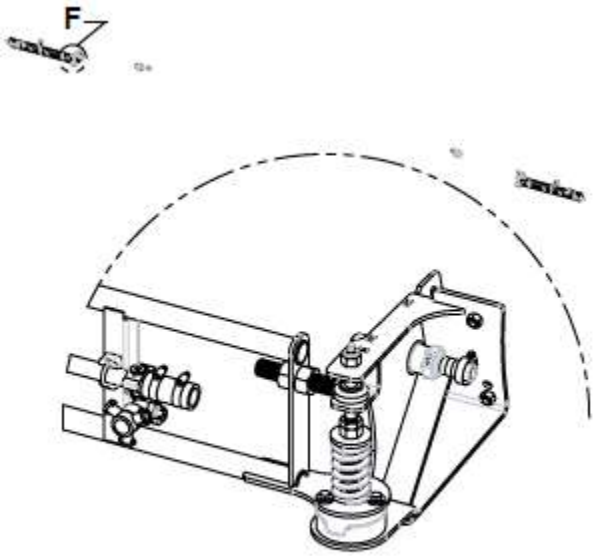

DETAIL F
SCALE 1 : 10

Parts List 99120TB60WGOP20T / 99132TB66WGOP: Truss Boom 60’ / 66’ Extension Option

ITEM	PART NO.	QTY.	DESCRIPTION
1	90SA6080SF	2	SUB-ASSY 60-80' SIDE FOLD FTNG
2	90SAPLUG	2	SUB-ASSY, PLUG; FTTNGS-C, W,1HB
3	**232**	2	NUT, NYLOCK 5/8-11 ZP
4	**759**	8	ZERK, 1/4-28 STRAIGHT PIPE THREAD
5	**14013**	2	SPRING GUIDE
6	**14575**	2	ADJUSTMENT BALL JOINT
7	**16511**	2	PLATE, VALVE MOUNT
8	**16700**	2	60' TRUSS WING
	16750		66’ TRUSS WING
9	**16705L**	1	LH BOLT ON WING MOUNT
10	**16705R**	1	RH BOLT ON WING MOUNT
11	**16871**	2	TUBE, 4 PORT 20"
	14330		TUBE, 5 PORT 22”
12	**16950**	2	TRUSS 60' WING STOP BRACKET
13	**500050**	2	VALVE 1" SIDE LOAD 3-WAY
14	**510016**	1.6 / 3.6	(FT) HOSE, 1IN EPDM
15	**510020**	3	(FT) HOSE, 0.375IN EPDM
16	**520016**	2	GASKET, QUICK TEEJET SEAT, STD EPDM
17	**520019**	2	CAP, NOZZLE, BLACK NYLON
18	**520030**	2	NOZZLE BODY, 25MM SINGLE
19	**520037**	2	VALVE, MANUAL SHUTOFF, FENCELINE

ITEM	PART NO.	QTY.	DESCRIPTION
20	**520050**	2	TIP, NOZZLE, BLUE POLYMER, FLAT SPRAY
21	**520084**	8	NOZZLE BODY, TRIPLE 25mm
22	**530041**	2	FITTING, 1.00 MNPT X 1.00 HB, POLY
23	**530044**	4	FITTING, ELBOW, 90D, 1.00 MNPT X 1.00 HB, POLY
24	**530056**	2	FITTING, TEE, 1.00 HB, POLY
25	**530206**	2	NUT, NOZZLE 11/16"
26	**530209**	2	FITTING, ELBOW, 90D, .250 MNPT X .375 HB, POLY
27	**530248**	2	QUICKJET ADAPTER NY
28	**530306**	2	NOZZLE, POLY FENCELINE W/ HB
29	**530309**	12	WASHER, 1.00 OD X .406 ID X .188, MAGNI
30	**530356**	2	GASKET, RUBBER QJT
31	**540014**	24	HOSE CLAMP, SS 1.00 #16
32	**540029**	6	CLAMP BODY, 1.00" TUBE, POLY GREEN
33	**540032**	4	HOSE CLAMP, 5/16 #5 SS
34	**590006**	2	SPRING, COMPRESSION
35	**590048**	6	U-BOLT, 1/4 X 1"
36	**590073**	2	CLUTCH, MALE 20~
37	**590074**	2	CLUTCH, FEMALE 20~
38	**590106**	2	PAD, TRANSPORT
39	**590112**	2	BOLT, BREAKAWAY
40	**590581**	4	RIVET, POUND IN, 1/4 X 7/16
41	**596101M**	4	BOLT, HH 1/4-20 X 3/4 GR5 MAGNI
42	**596152M**	4	BOLT, HH 1/2 X 1 GR5 MAGNI
43	**596217M**	2	NUT, HEX 3/4-10 G5 MAGNI
44	**596218M**	4	NUT, HEX 1-8 MAGNI
45	**596225M**	2	NUT, HEX JAM 3/4-10 GR8 MAGNI
46	**596235M**	4	NUT, CENTERLOCK, 1/4-20 MAGNI
47	**596237M**	4	NUT, CENTERLOCK 3/8-16 MAGNI
48	**596239M**	4	NUT, CENTERLOCK, 1/2-13 MAGNI
49	**596633M**	12	BOLT, HH 3/8-24 X 1-1/4 GR5 MAGNI
50	**596767M**	12	NUT, HEX FLANGE 1/4-20 MAGNI
51	**596818M**	4	BOLT, HH 3/8-16 X 3/4 GR5 MAGNI

XRT AutoBoom

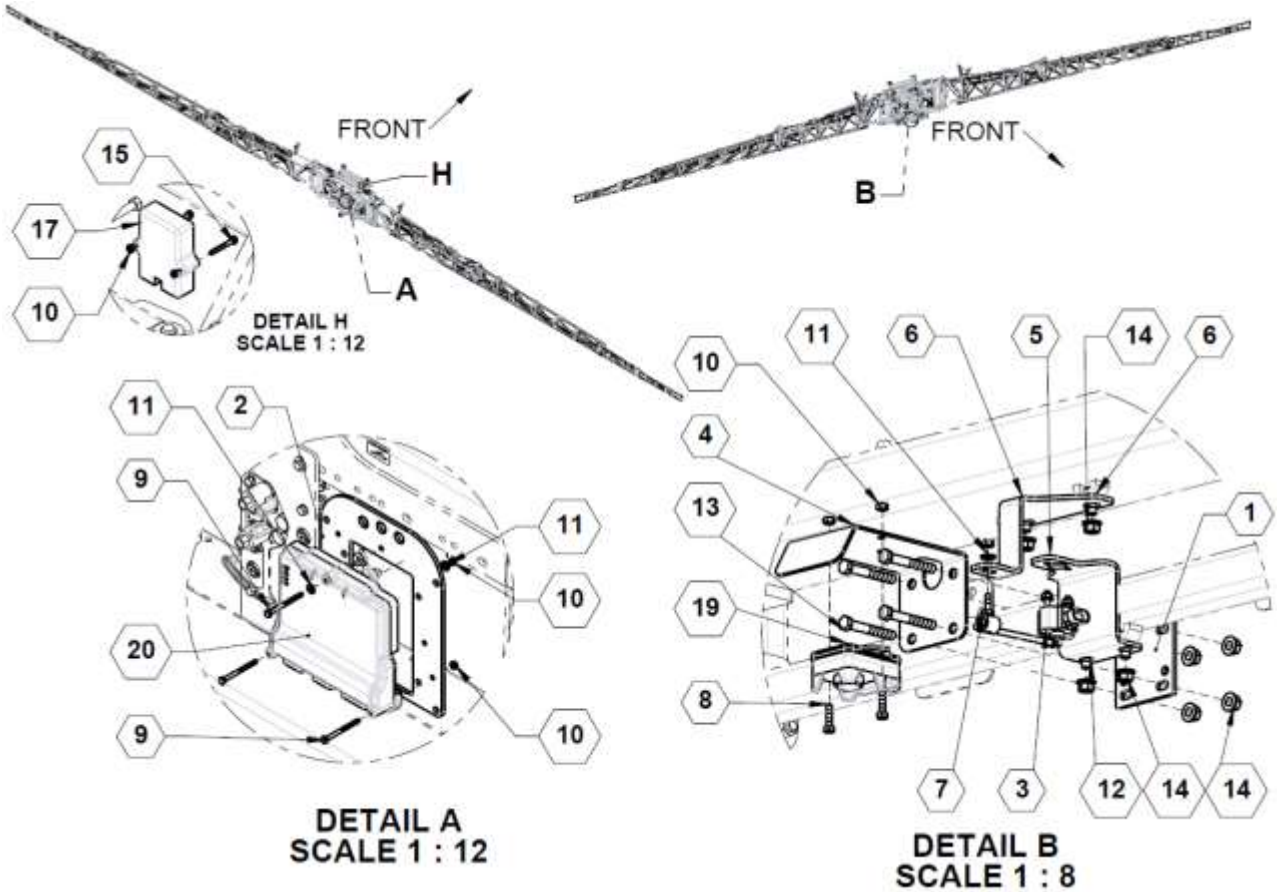

Parts List 36709: XRT AutoBoom

ITEM	PART NO.	QTY.	DESCRIPTION
1	**18317**	1	PLATE, BACKING
2	**37157**	1	PLATE, RCM MOUNT
3	**28853-1**	1	ASSEMBLY, ROTATION SENSOR 050
4	**28895**	1	BRACKET, XRT SENSOR, TRUSS CENTER
5	**34701**	1	PLATE, SENSATA MOUNT
6	**34719**	1	PLATE, ROLL SENSOR
7	**34721**	1	WLDMNT, SLIDE PIVOT
8	**596102M**	2	BOLT, HH 1/4-20 X 1 GR5 MAGNI
9	**596107M**	2	BOLT, HH 1/4-20X3-1/2 GR5 MAGNI
10	**596110M**	3	BOLT, HH 1/4-20 X 3 MAGNI
11	**596235M**	8	NUT, CENTERLOCK, 1/4-20 MAGNI
12	**596256M**	3	WASHER, FLAT 1/4 USS MAGNI
13	**596592M**	4	BOLT, CARRIAGE 3/8-16 X 1 MAGNI
14	**596637M**	4	BOLT, HH 3/8-16 X 2-3/4 GR5 MAGNI
15	**596769M**	8	NUT, HEX FLANGE 3/8-16 MAGNI
16	**632199**	1	NODE, XRT AUTOBOOM FOLD YAW
17	**632055**	1	CABLE, 17’ EXTENSION GEN 1 ISO
18	**632207**	1	KIT, XRT AB/AF/AY 120/132
19	**632209**	1	SENSOR, XRT
20	**632225**	1	RAVEN REM XRT

XRT AutoBoom (continued)

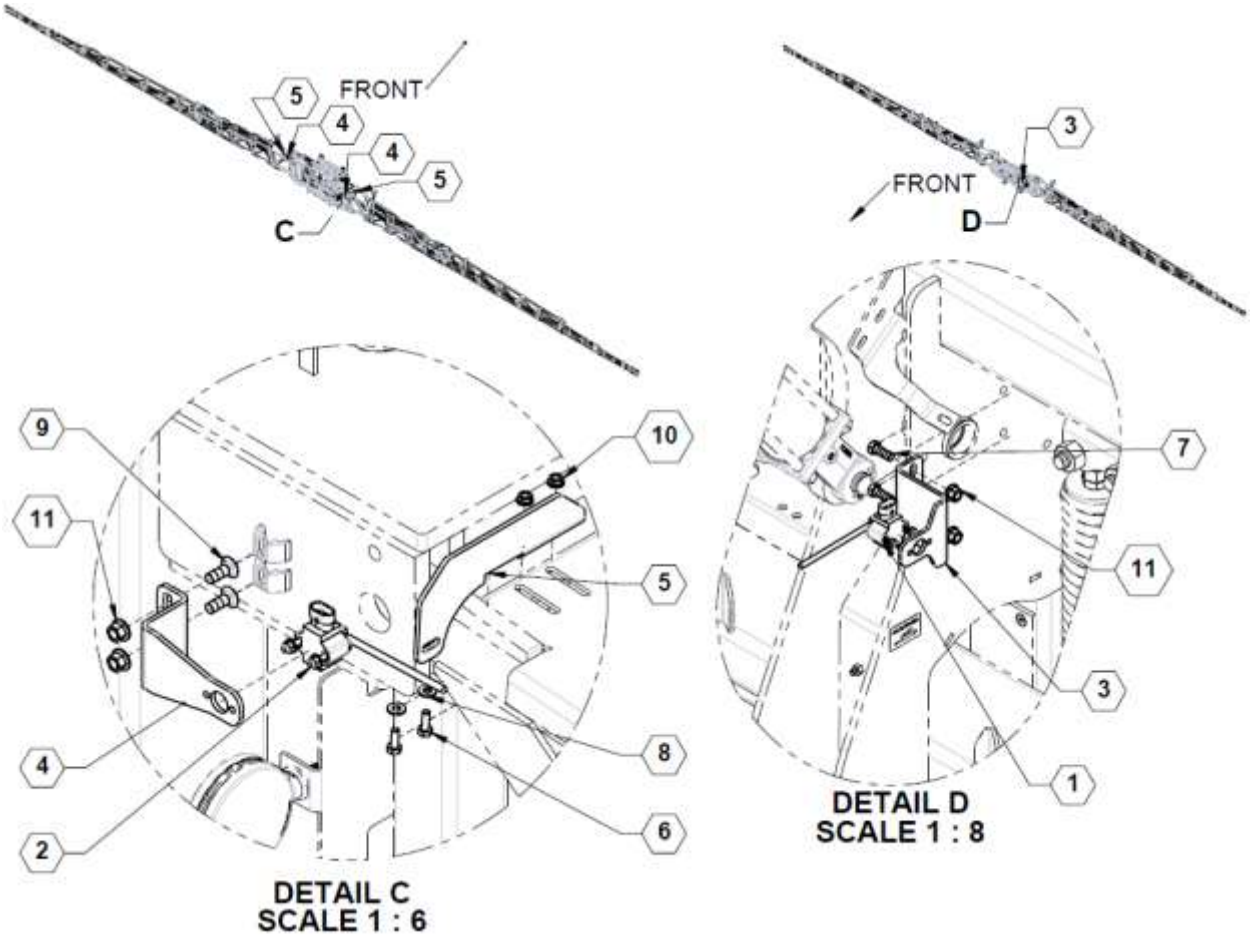

Parts List 36709: XRT AutoBoom

ITEM	PART NO.	QTY.	DESCRIPTION
1	21495-1	1	ASSEMBLY, ROTATION SENSOR 050
2	28853-1	2	ASSEMBLY, ROTATION SENSOR 180
3	**34701**	1	PLATE, SENSATA MOUNT
4	**34704**	2	PLATE, TILT ROTARY SENSOR
5	**34705**	2	PLATE, WING TILT SENSOR
6	**596101M**	4	BOLT, HH 1/4-20 X 3/4 GR5 MAGNI
7	**596128M**	2	BOLT, HH 3/8-16 X 1 GR5 MAGNI
8	**596256M**	4	WASHER, FLAT 1/4 USS MAGNI
9	**596592M**	2	BOLT, CARRIAGE 3/8-16 X 1 MAGNI
10	**596767M**	4	NUT, HEX FLANGE 1/4-20 MAGNI
11	**596769M**	4	NUT, HEX FLANGE 3/8-16 MAGNI

XRT AutoBoom (continued)

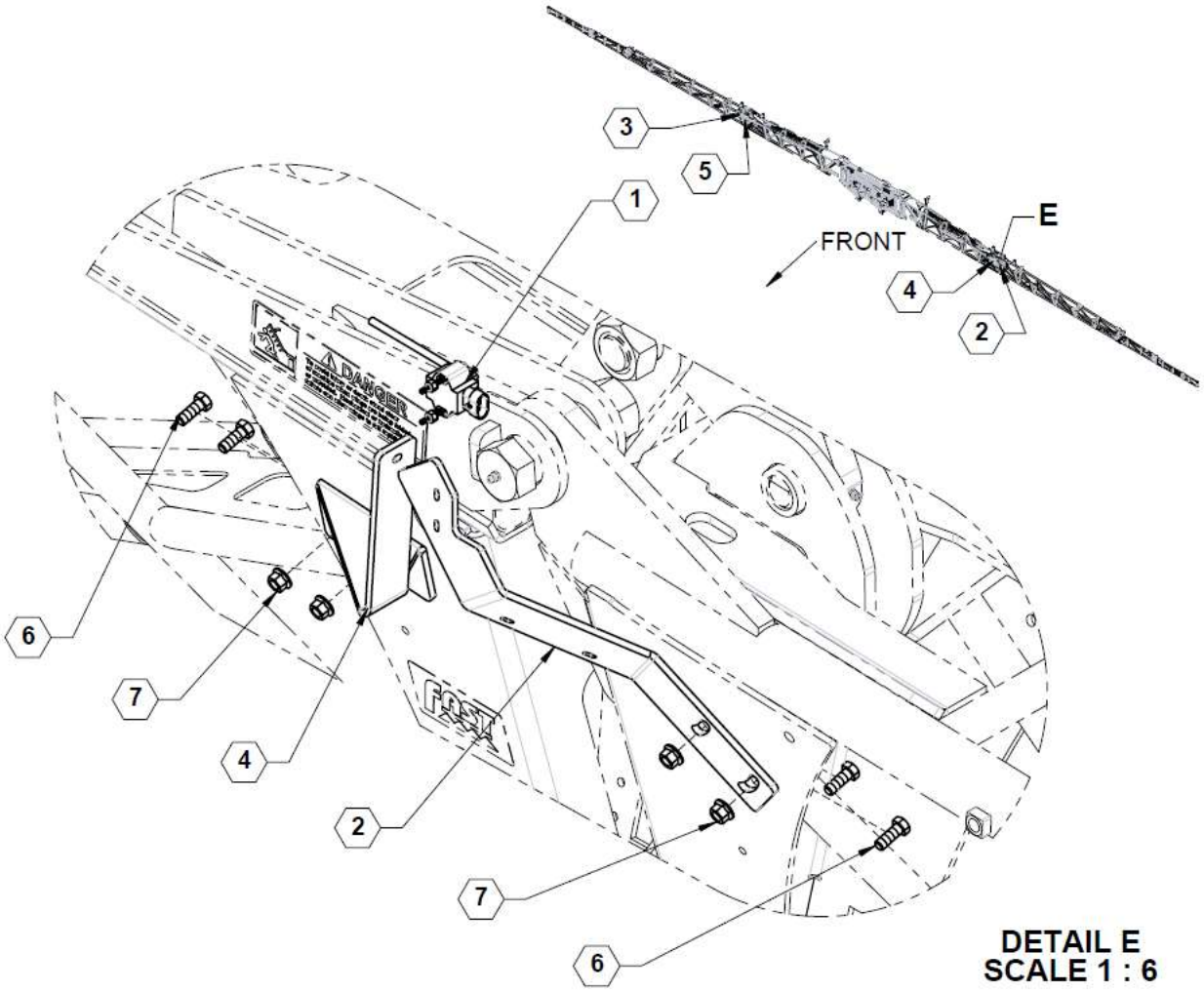

Parts List 36709: XRT AutoBoom

ITEM	PART NO.	QTY.	DESCRIPTION
1	22955-1	2	ASSEMBLY, ROTATION SENSOR 270
2	**28840**	1	LH PRIMARY FLIP ROT SENSOR BRCKT
3	**28841**	1	BRACKET, RH PRIMARY FLIP ROTARY SENSOR
4	**28842**	1	BRACKET, LH PRIMARY FLIP SENSOR ROD
5	**28843**	1	BRACKET, RH PRIMARY FLIP SENSOR ROD
6	**596128M**	8	BOLT, HH 3/8-16 X 1 GR5 MAGNI
7	**596769M**	8	NUT, HEX FLANGE 3/8-16 MAGNI

XRT AutoBoom (continued)

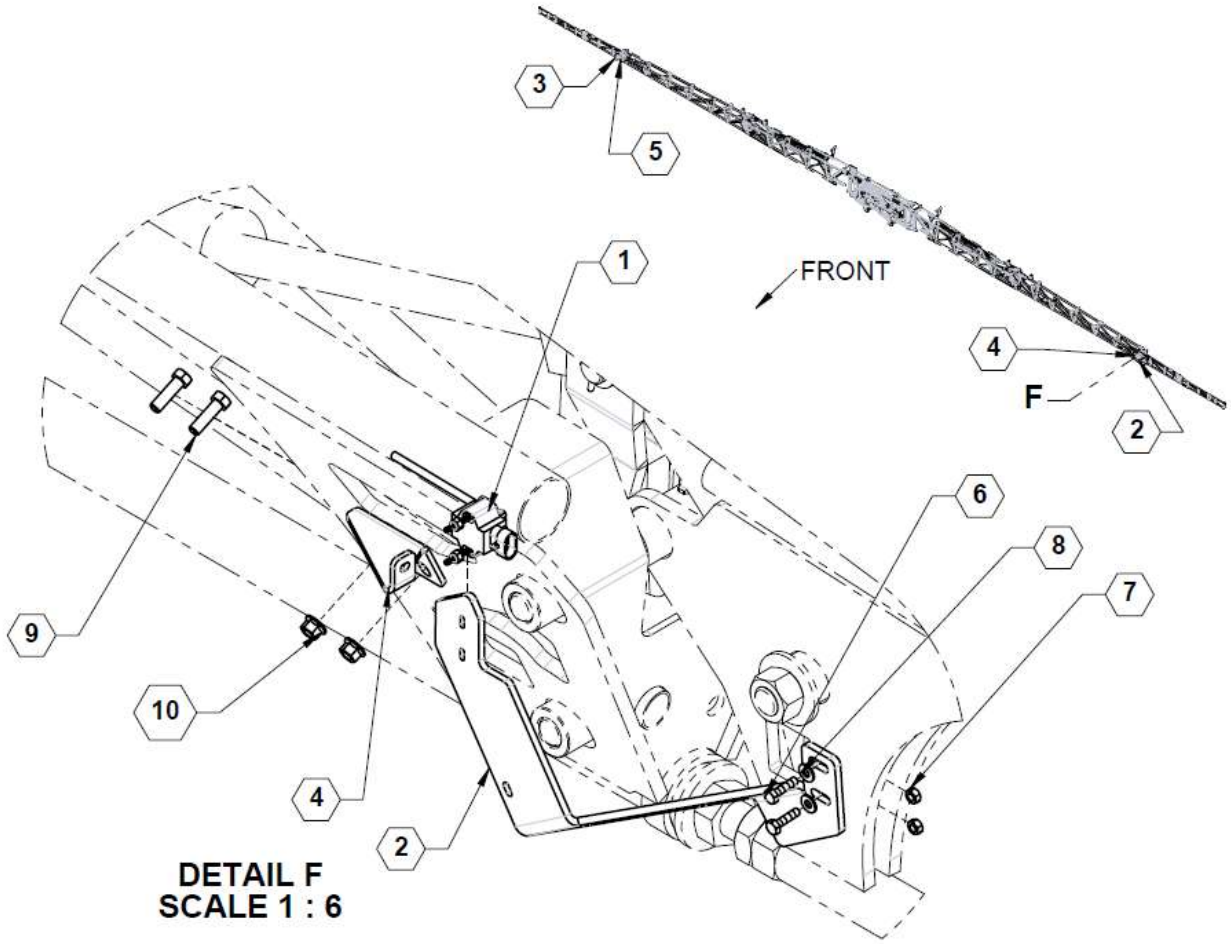

Parts List 36709: XRT AutoBoom

ITEM	PART NO.	QTY.	DESCRIPTION
1	22955-1	2	ASSEMBLY, ROTATION SENSOR 270
2	**28844**	1	BRACKET, LH 2ND FLIP ROTARY SENSOR
3	**28845**	1	BRACKET, RH 2ND FLIP ROTARY SENSOR
4	**28846**	1	BRACKET, LH 2ND FLIP SENSOR ROD
5	**28847**	1	BRACKET, RH 2ND FLIP SENSOR ROD
6	**596102M**	4	BOLT, HH 1/4-20 X 1 GR5 MAGNI
7	**596235M**	4	NUT, CENTERLOCK, 1/4-20 MAGNI
8	**596256M**	4	WASHER, FLAT 1/4 USS MAGNI
9	**596635M**	4	BOLT, HH 3/8-16 x 1-1/4 MAGNI
10	**596769M**	4	NUT, HEX FLANGE 3/8-16 MAGNI

XRT AutoBoom (continued)

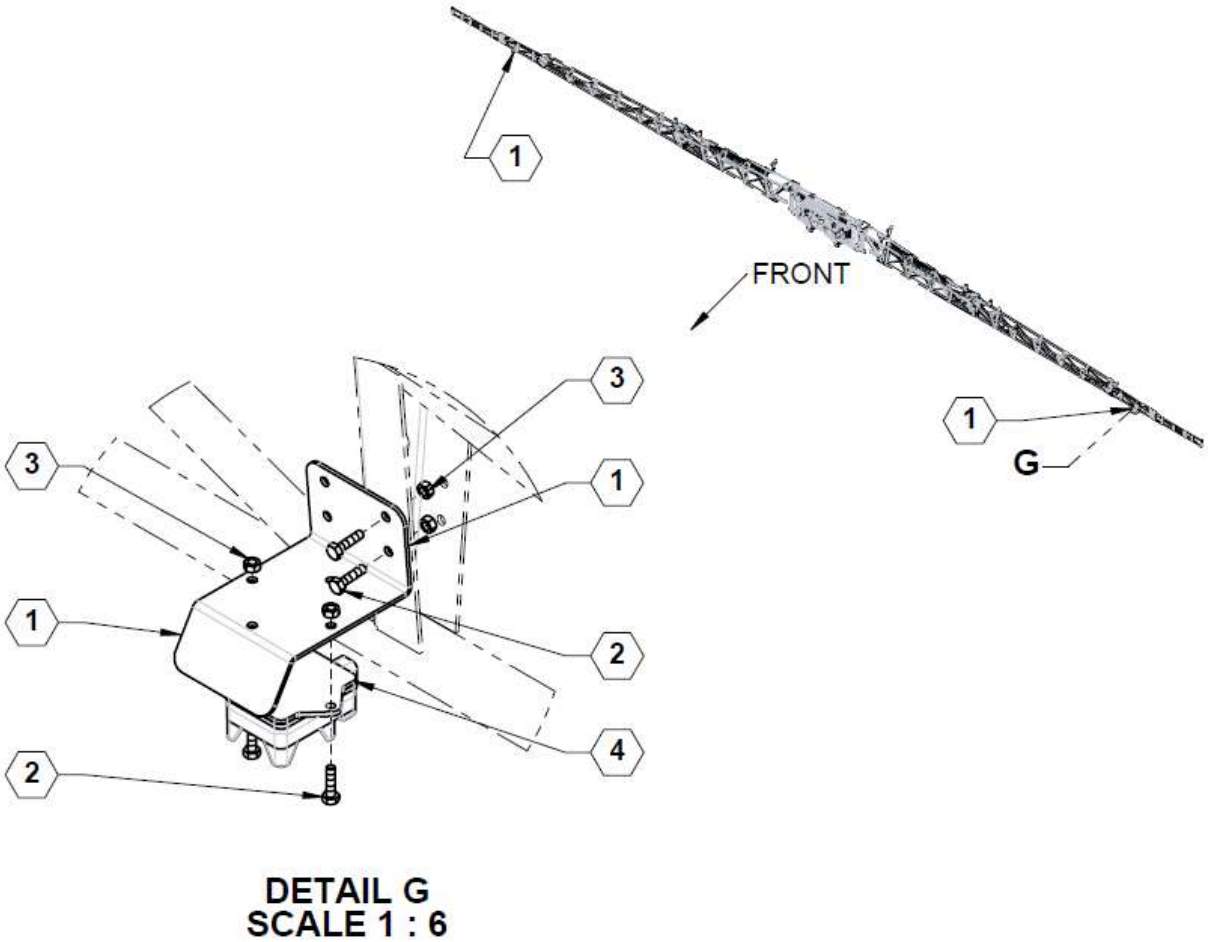

Parts List 36709: XRT AutoBoom

ITEM	PART NO.	QTY.	DESCRIPTION
1	**28897**	2	BRACKET, XRT SENSOR, TRUSS OUTER WING
2	**596102M**	8	BOLT, HH 1/4-20 X 1 GR5 MAGNI
3	**596235M**	8	NUT, CENTERLOCK, 1/4-20 MAGNI
4	**632209**	2	SENSOR, XRT

XRT AutoBoom +2 Sensor Option

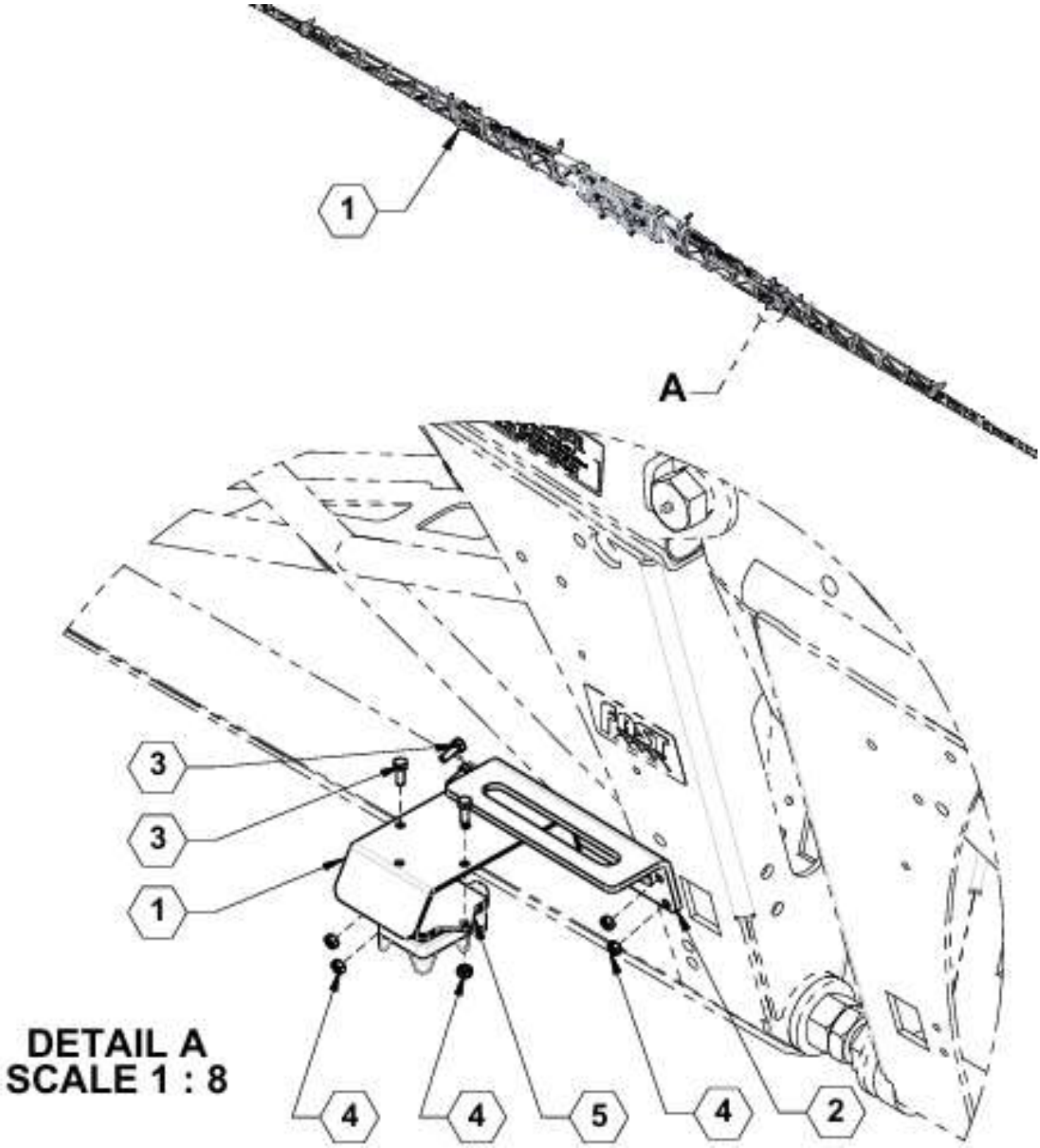

Parts List 36710: XRT AutoBoom +2 Sensor Option

ITEM	PART NO.	QTY.	DESCRIPTION
1	**28896**	2	BRACKET, XRT SENSOR, TRUSS INNER WING
2	**39852**	2	PLATE, +2 RADAR OFFSET
3	**596101M**	8	BOLT, HH 1/4-20 X 3/4 GR 5 MAGNI
4	**596235M**	8	NUT, CENTERLOCK, 1/4-20 MAGNI
5	**632209**	2	SENSOR, XRT

XRT Rotation Sensor

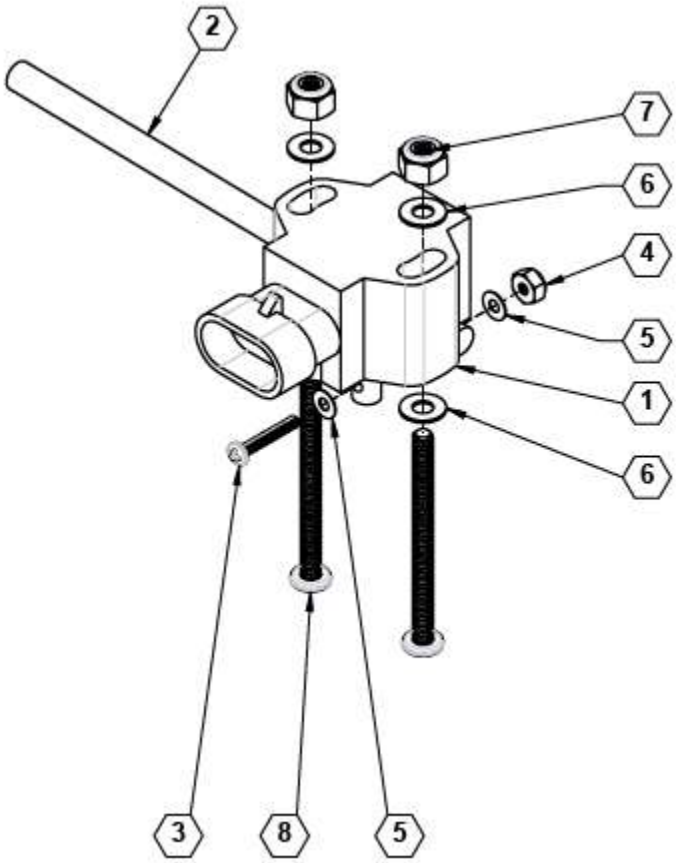

Parts List 21495-1 / 22955-1 / 28853-1: XRT Rotation Sensor

ITEM	PART NO.	QTY.	DESCRIPTION
1	**21495**	1	180 ROTARY SENSOR
	22955		270 ROTARY SENSOR
	28853		050 ROTARY SENSOR
2	**22906**	1	ROD, ROTARY SENSOR LEVER
3	**590275**	1	SCREW PHIL 3-48 X .625 SS18-8
4	**590276**	1	NUT NYLON 3-48 SS18-8
5	**590277**	2	WASHER #3 SS18-8
6	**590435**	4	(180/270) WASHER, #8 SS
	590272		(050 only) WASHER, #10 SS
7	**590436**	2	(180/270) NUT, NYLOCK, 8-32 SS
	590274		(050 only) NUT, NYLON 10-24 SS
8	**590437**	2	(180/270) SCREW, #8-32 X 2" SS
	590275		(050 only) SCREW, #10-24 X 1.75 SS

TANK & PUMP

Main, Rinse, and Handwash Tank

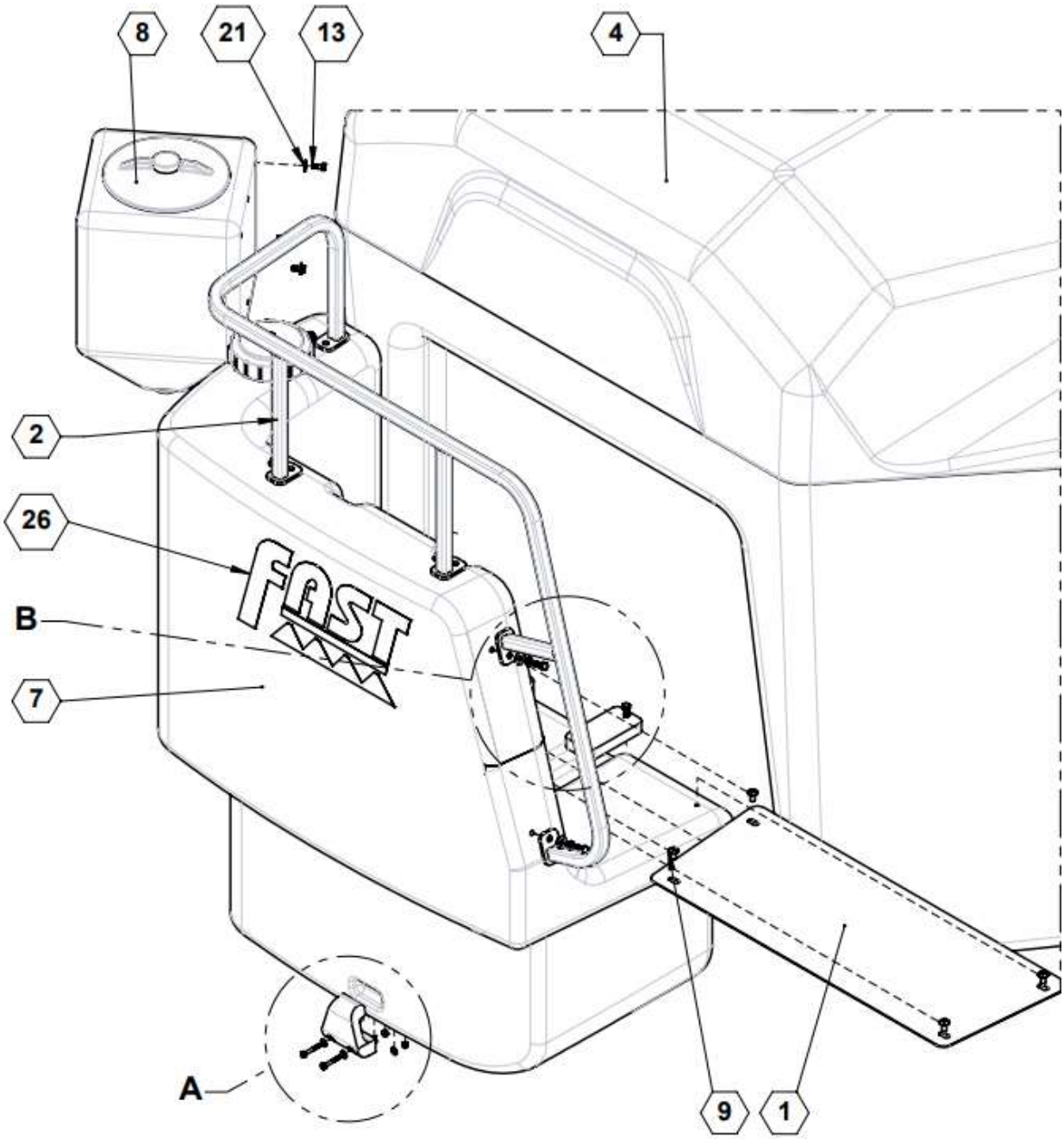

Main, Rinse, and Handwash Tank (continued)

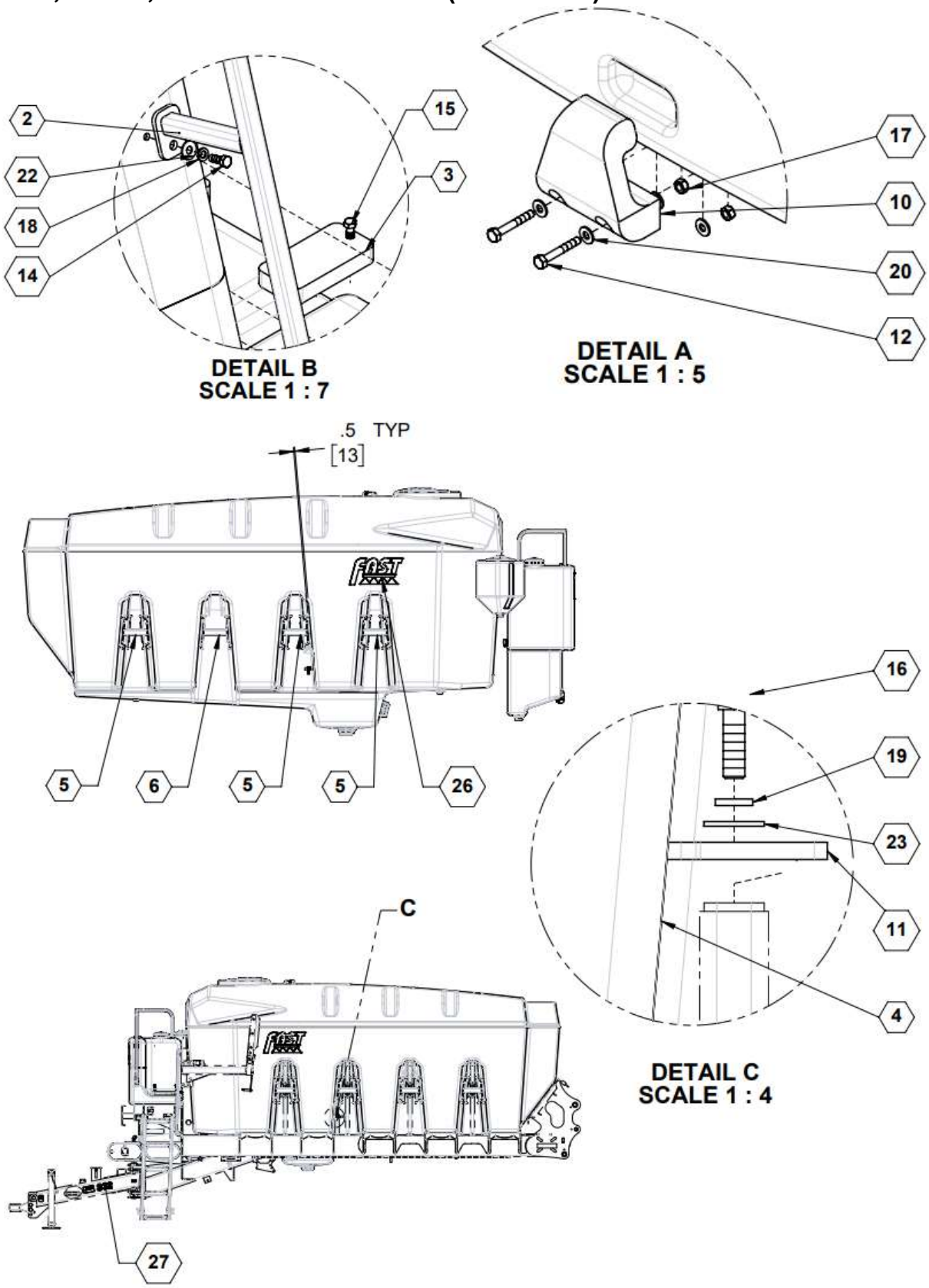

Parts List 36166 / 36167: Main, Rinse, and Handwash Tank

ITEM	PART NO.	QTY.	DESCRIPTION
1	**10612**	1	PLATFORM, TOP
2	**10638**	1	HANDRAIL ASSEMBLY
3	**10669**	2	RINSE TANK REAR HOLD DOWN
4	**36160**	1	TANK W/ FITTINGS, 3200-GAL, YELLOW
	36165		TANK W/ FITTINGS, 3200-GAL, WHITE
5	37890	6	WELDMENT, VOID BRACE
6	37895	2	WELDMENT, LARGE VOID BRACE
7	**570004TNK**	1	RINSE TANK, 100 GALLON, YELLOW
	570003TNK		RINSE TANK, 100 GALLON, WHITE
8	**570097**	1	TANK 10-GAL, YELLOW
	570092		TANK 10-GAL, WHITE
9	**590001**	4	PHILLIPS PANHEAD #10 X 3/4" SMS
10	**590022**	1	HOLD-DOWN
11	**590407**	2	TAB, HOLD DOWN
12	**596104M**	2	BOLT, HH 1/4-20X1-3/4 GR5 MAGNI
13	**596114M**	4	BOLT, HH 5/16-18X3/4 GR5 MAGNI
14	**596128M**	5	BOLT, HH 3/8-16 X 1 GR5 MAGNI
15	**596130M**	2	BOLT, HH 3/8-16 X 2 GR5 MAGNI
16	**596170M**	2	BOLT, HH 5/8-11X2 GR5 MAGNI
17	**596235M**	2	NUT, CENTERLOCK, 1/4-20 MAGNI
18	**596250M**	5	LOCKWASHER, 3/8 MAGNI
19	**596253M**	2	LOCKWASHER 5/8 MAGNI
20	**596256M**	4	WASHER, FLAT 1/4 USS MAGNI
21	**596257M**	4	WASHER, FLAT 5/16 USS MAGNI
22	**596258M**	13	WASHER, FLAT 3/8 MAGNI
23	**596261M**	2	WASHER, FLAT 5/8 MAGNI
24	**596637M**	8	BOLT, HH 3/8-16 X 2-3/4 GR5 MAGNI
25	**596769M**	8	NUT, HEX FLANGE 3/8-16 MAGNI
26	**800181**	3	FAST TANK LOGO
27	**800372**	2	DECAL, S32 SILVER, 3200-GAL TANK

See also: Hand Wash Hose & Fittings

3200 Gal. Tank with Fittings

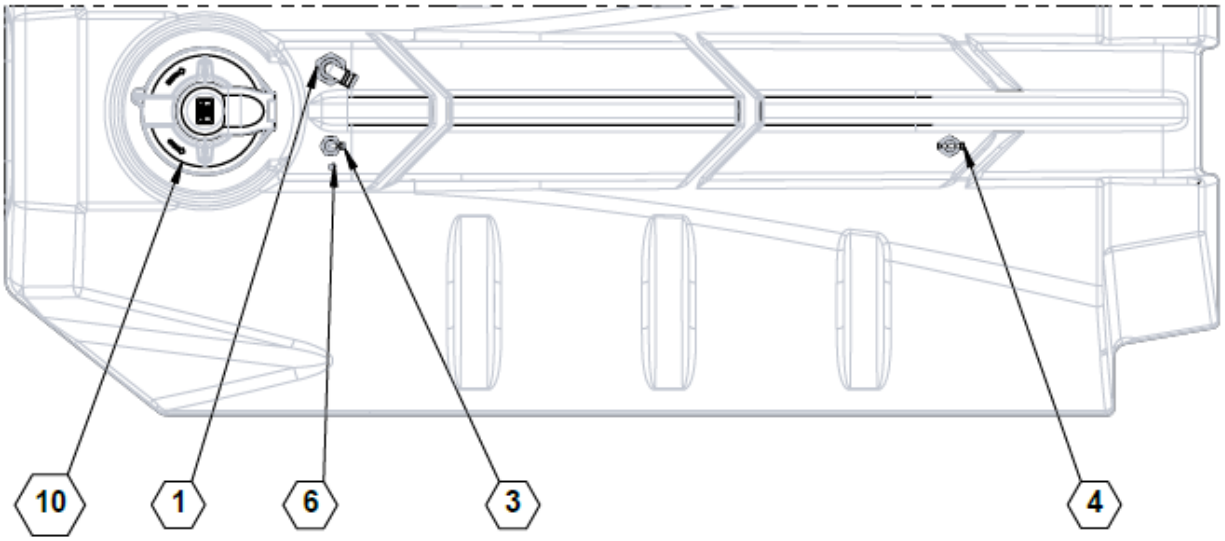

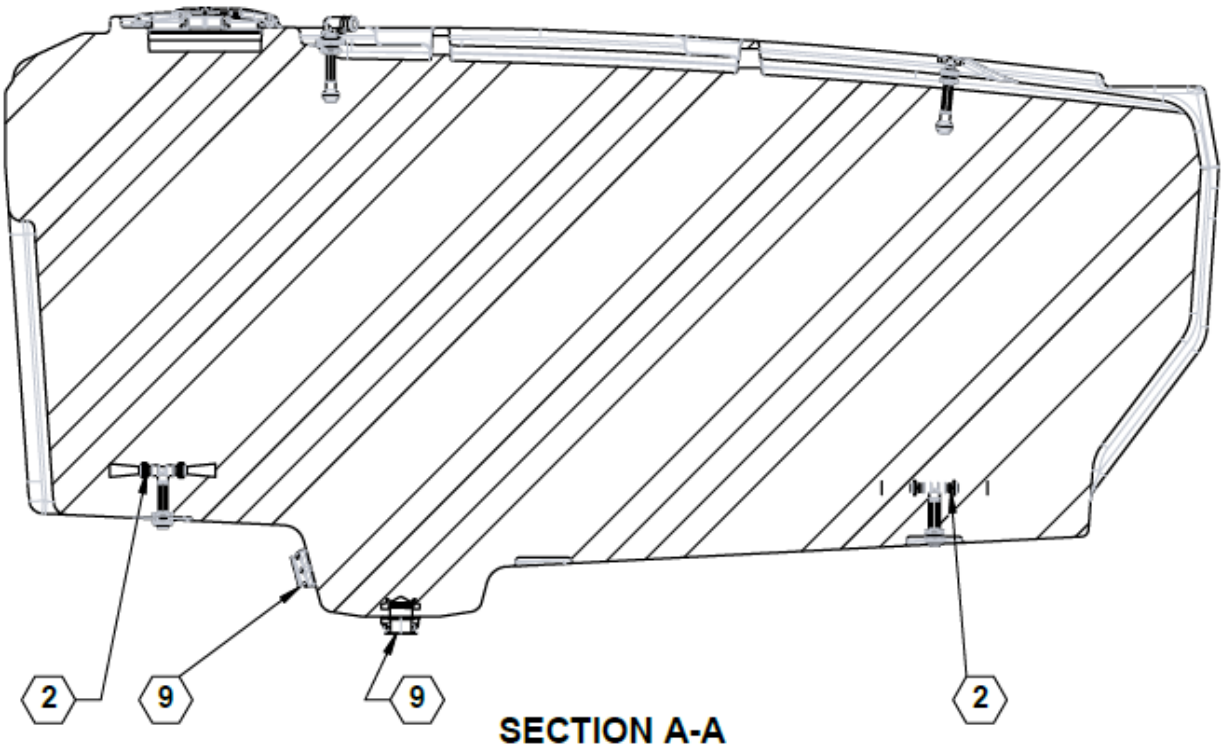

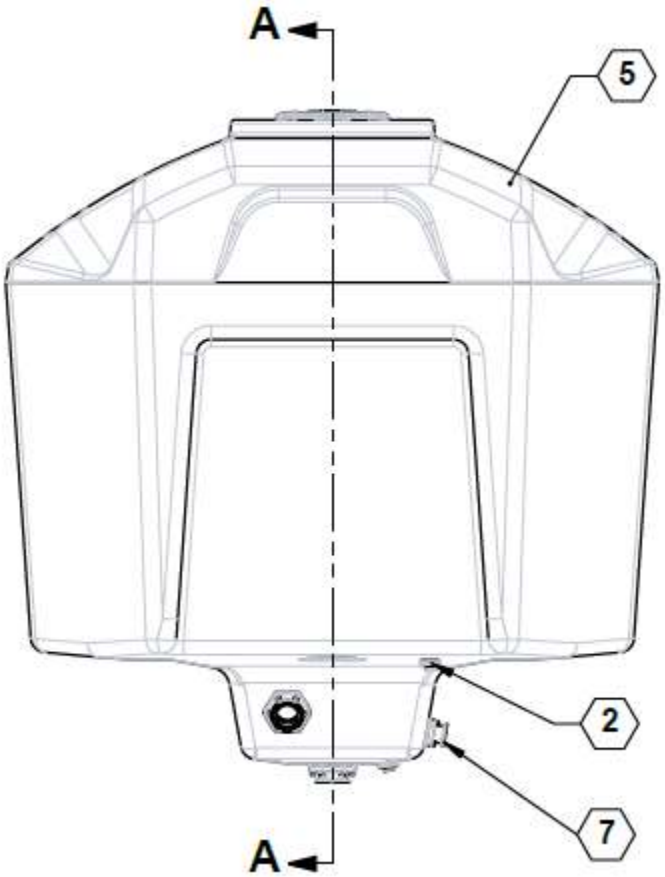

Parts List 36160 / 36165: 3200 Gal. Tank with Fittings

ITEM	PART NO.	QTY.	DESCRIPTION
1	90SAFCOV	1	FERT TANK VENTED OVERFLOW
2	90SALTRUMPET	2	AGITATION ASSEMBLY
	90SASHORTTRUMPET		ASSY, SHORT AGITATION
3	90SARNSEBALLASY	1	RINSE BALL W/90° ELBOW
4	90SARNSEBALLASYT	1	RINSE BALL W/ TEE
5	36159	1	TANK, 3200-GAL YELLOW SPRAY, CUT
	36164		TANK, 3200-GAL WHITE SPRAY, CUT
6	530004	1	FITTING, ELBOW, .250 QC X .250 MPT, 90D
7	530118	1	TANK FITTING, 2" FLANGE BD
8	530160	1	FLANGE, 3/4" POLY TANK
9	530508	2	FITTING, 3" BOLTED FLANGE BOTTOM DRAIN
10	570158	1	LID, NONVENTED, DEN HARTOG 14762

Tank Lid Baffle

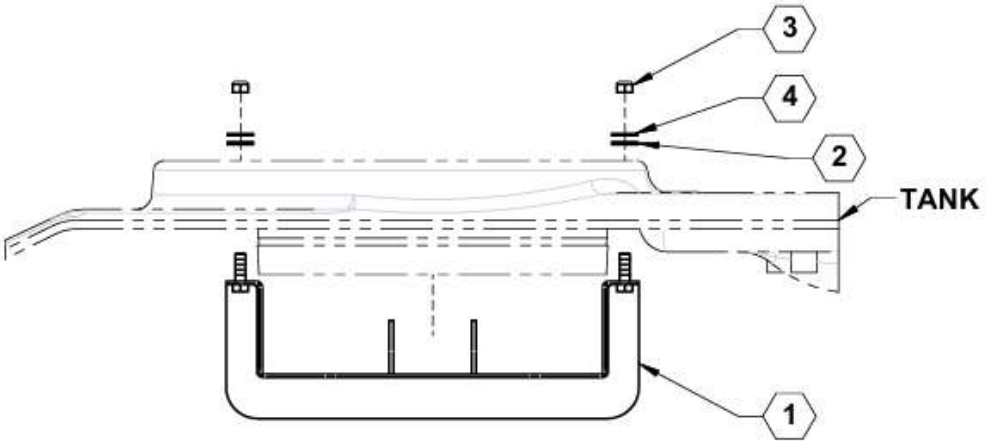

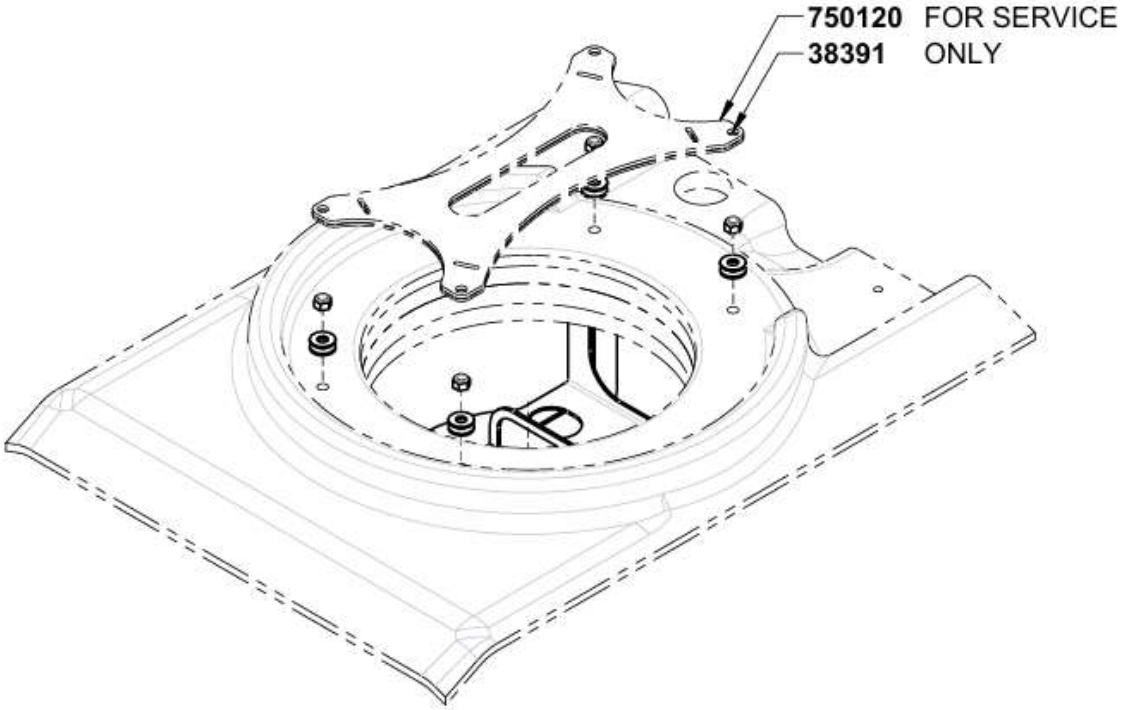

Parts List 38390: Tank Lid Baffle

ITEM	PART NO.	QTY.	DESCRIPTION
1	**38390**	1	WELDMENT, BAFFLED TANK OPENING
-	**38391**	-	METAL STENCIL, BAFFLE HOLE GUIDE
-	**750120**	-	UHMW STENCIL, BAFFLE HOLE GUIDE
2	**530569**	4	GASKET, LID BAFFLE
3	**590862**	4	NUT, NYLOCK 1/2-13 SS
4	**590854**	4	WASHER, FLAT 1/2 SS

Tank Vented Overflow Fitting

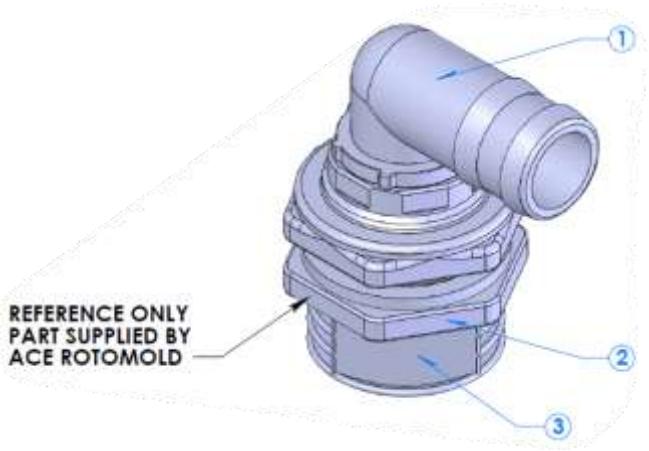

Parts List 90SAFCOV: Tank Vented Overflow Fitting

ITEM	PART NO.	QTY.	DESCRIPTION
1	**530051**	1	2" MPT X 2" HB 90°
2	**530163**	1	2" TANK FITTING
3	**530331**	1	2" VENTED CAP

Tank Agitation Fittings

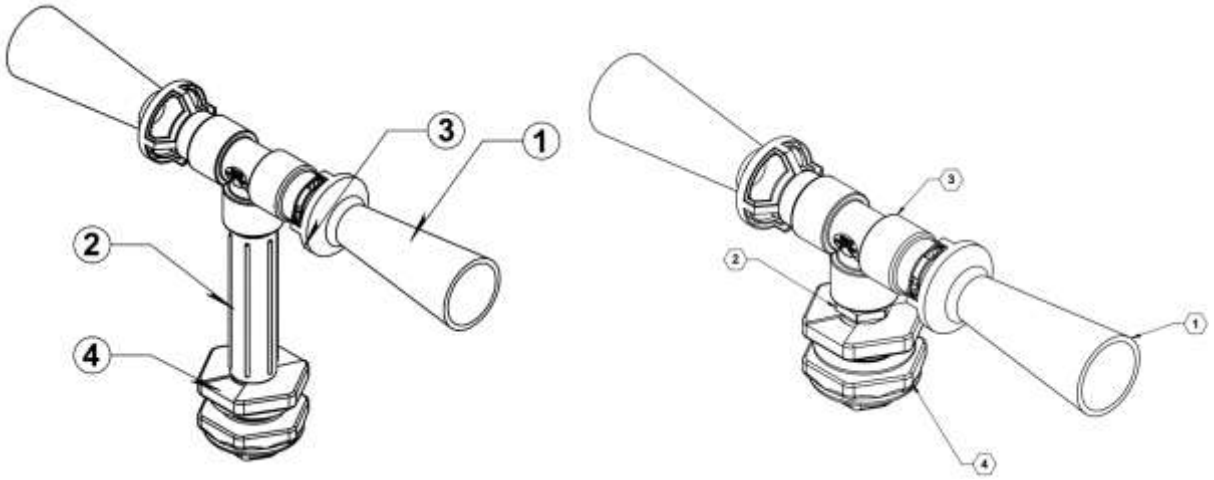

Parts List 90SALTRUMPET / 90SASHORTTRUMPET: Tank Agitation Fittings

ITEM	PART NO.	QTY.	DESCRIPTION
1	**520029**	2	AGITATION NOZZLE
2	**530130**	1	NIPPLE, 3/4" X 6"
	530131		NIPPLE, 3/4” SHORT
3	**530156**	1	TEE, 3/4" NPT
4	**530160**	1	3/4" BULKHEAD FITTING

Rinse Ball Assembly, 90° Elbow

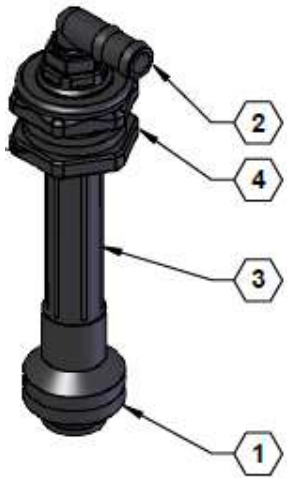

Parts List 90SARNSEBALLASY: Rinse Ball Assembly, 90 Elbow

ITEM	PART NO.	QTY.	DESCRIPTION
1	**520012**	1	NOZZLE, RINSE TANK
2	**530040**	1	HOSE SHANK, 3/4" MPT X 3/4" HB 90~
3	**530130**	1	NIPPLE, 3/4" X 6"
4	**530160**	1	FLANGE, 3/4" POLY TANK

Rinse Ball Assembly, Tee

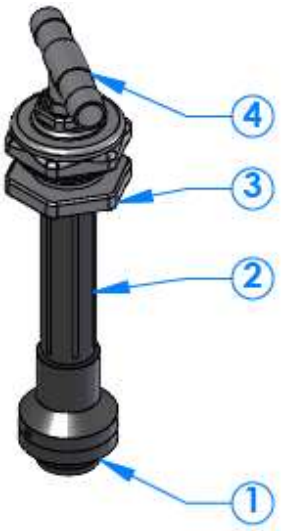

Parts List 90SARNSEBALLASYT: Rinse Ball Assembly, Tee

ITEM	PART NO.	QTY.	DESCRIPTION
1	520012	1	NOZZLE, RINSE TANK
2	**530130**	1	NIPPLE, 3/4" X 6"
3	**530160**	1	FLANGE, 3/4" POLY TANK
4	**530221**	1	3/4” MPT X 3/4” HOSE BARB TEE

Rinse Tank

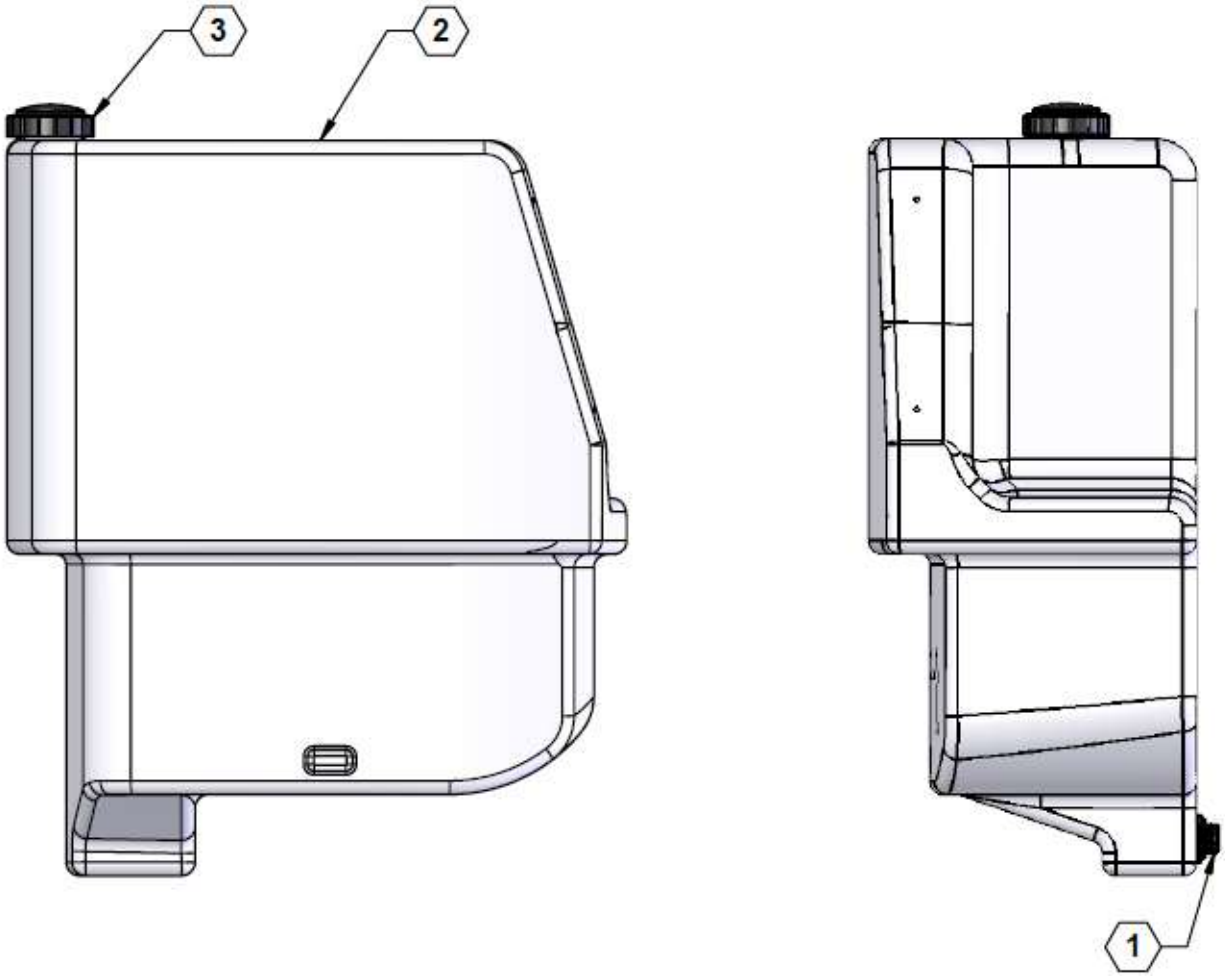

Parts List 570003TNK / 570004TNK: Rinse Tank

ITEM	PART NO.	QTY.	DESCRIPTION
1	**530522**	1	FITTING, 1.25" POLY BULKHEAD
2	**570179**	1	TANK, 100 GALLON YELLOW RINSE
3	**570181**	1	LID, 5" WITH 2 WAY STEP VENT

Eductor Tank – 15 Gal.

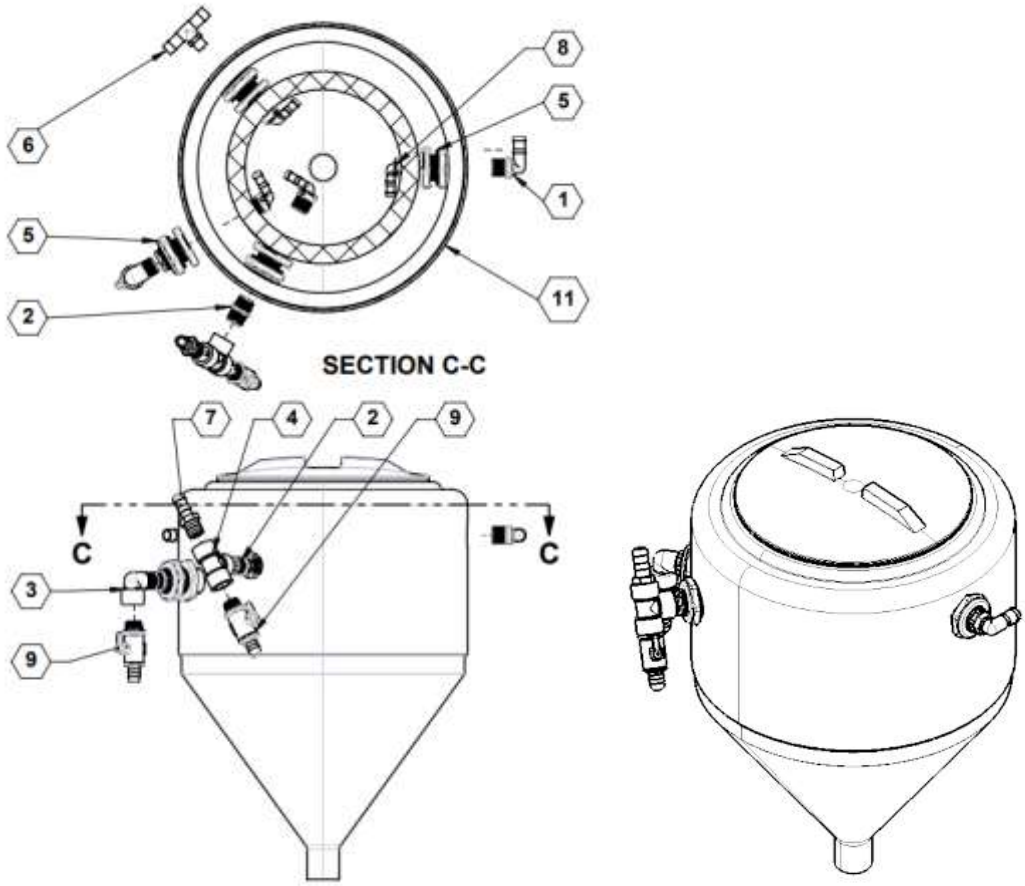

Parts List 36196 / 36297: Eductor Tank – 15 Gal.

ITEM	PART NO.	QTY.	DESCRIPTION
1	**530040**	1	HOSE SHANK, 3/4" MPT X 3/4" HB 90~
2	**530131**	1	NIPPLE, .75 MNPT, SHORT POLY
3	**530151**	1	ELBOW, STREET 3/4" 90~
4	**530156**	1	TEE, 3/4" POLY PIPE
5	**530160**	4	FLANGE, 3/4" POLY TANK
6	**530221**	1	3/4" MPT X 3/4" HOSE BARB TEE
7	**530230**	1	FITTING, .75 MPT X .75 HB
8	**530263**	4	FITTING, 3/4MPT X 1/2 HB 90
9	**530516**	2	MICRO VALVE, 3/4" MPT X 3/4" HB
10	**570121**	1	FLAT GASKET
11	**570190TNK**	1	(WHITE) EDUCTOR, 15 TANK WITH HOLES
	570192TNK		(YELLOW) EDUCTOR, 15 TANK WITH HOLES
12	**590469**	1	JUG RINSE KIT, 15-GAL, 16" LID

Pump Non-PWM (ACE 255F-304 WET SEAL or ACE FMC-750-HYD OASIS)

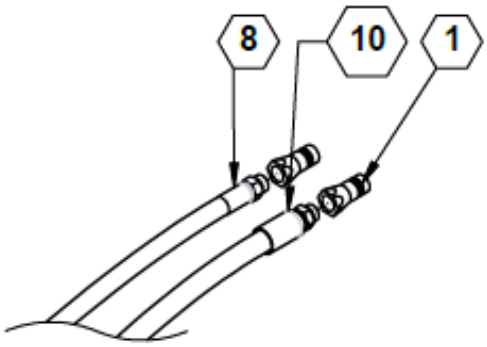

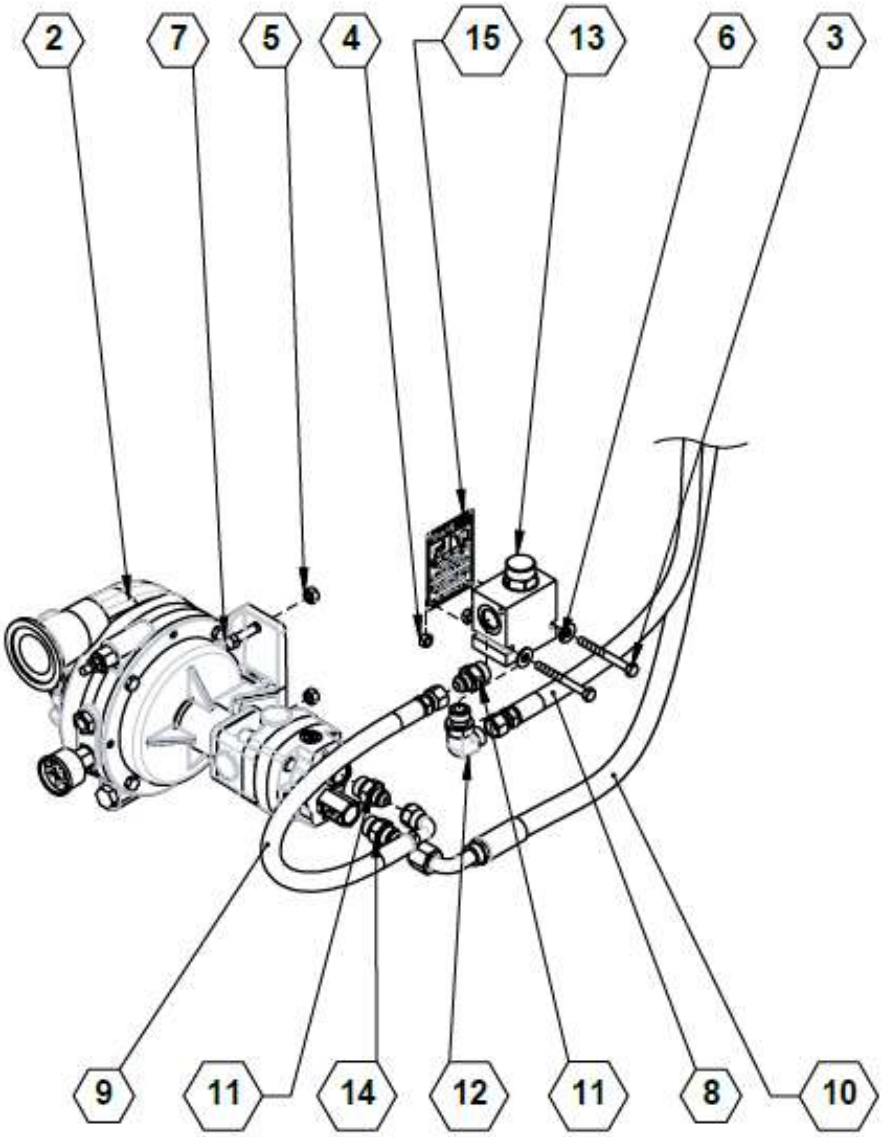

Parts List 36200 / 36202: Pump Non-PWM (ACE 255F-304 WET SEAL or ACE FMC-750-HYD OASIS)

ITEM	PART NO.	QTY.	DESCRIPTION
1	**520048**	2	PIONEER COUPLER #8 FORB
2	**550055**	1	PUMP, ACE 255F-304 WET SEAL
	550018		PUMP, ACE FMC-750F-HYD-M22
3	**596119M**	2	BOLT, HH 5/16-18 X 3 GR5 MAGNI
4	**596236M**	2	NUT, CENTERLOCK, 5/16-18 MAGNI
5	**596237M**	2 (250F)	NUT, CENTERLOCK 3/8-16 MAGNI
		4 (750F)	
6	**596257M**	2	WASHER, FLAT 5/16 USS MAGNI
7	**596635M**	2 (250F)	BOLT, HH 3/8-16 x 1-1/4 MAGNI
		4 (750F)	
8	**600137-01-ZN**	1	HOSE ASSY, 8-8MORB-8FJX-149
9	**600137-02-ZN**	1	HOSE ASSY, 8-8FJX-10FJX90-24
10	**600137-03-ZN**	1	HOSE ASSY, 10-8MORB-10FJX90-154
11	**610060**	2	JIC #8 TO ORING #10
12	**610086**	1	JIC #8 TO O-RING #10 ELBOW 90°
13	**610099**	1	(250F) FLOW REGULATOR, 13 GPM
	630057		(750F) FLOW REGULATOR, 16 GPM
14	**610106**	1	ADAPTER, -10MJIC X -10MORB
15	**800004**	1	DECAL, WARNING-HIGH PRESSURE
16	**830017**	0	SCHEMATIC, HYDRAULIC S-SERIES

Pump PWM (ACE 255F-304 PWM WET SEAL or ACE FMC-750-HYD PWM OASIS)

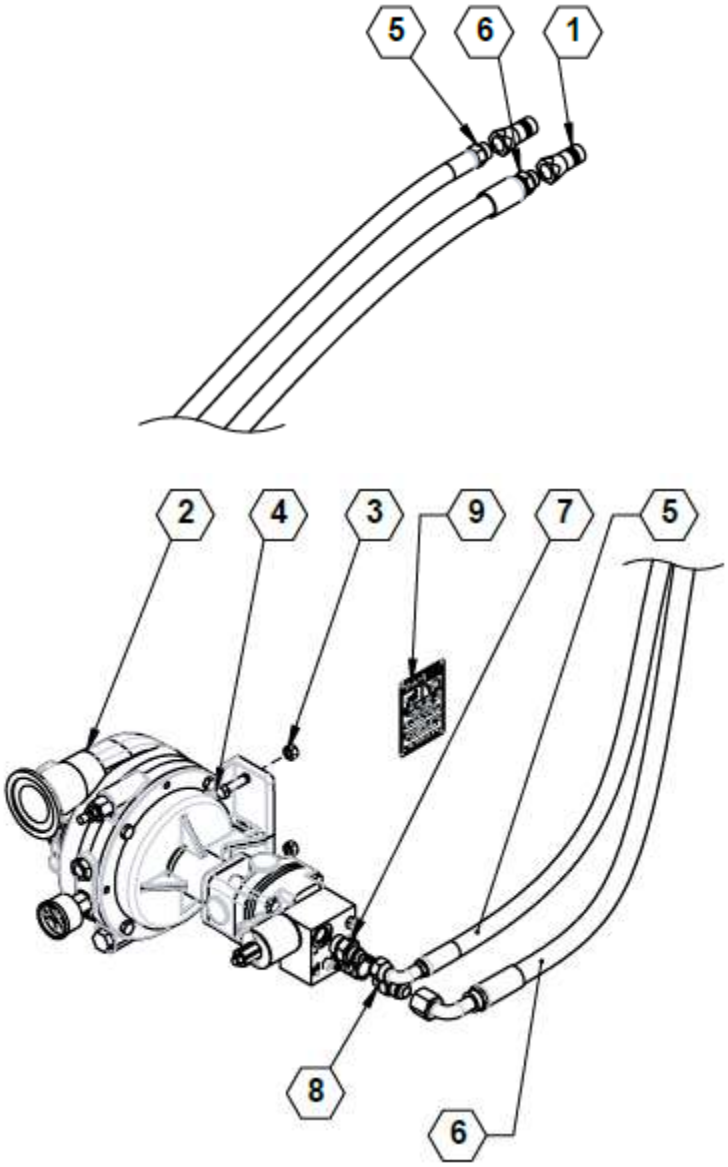

Parts List 36199 / 36201: Pump PWM (ACE 255F-304 PWM WET SEAL or ACE FMC-750-HYD PWM OASIS)

ITEM	PART NO.	QTY.	DESCRIPTION
1	**520048**	2	PIONEER COUPLER #8 FORB
2	**550056**	1	PUMP, ACE 255F-304 PWM WET SEAL
	550044		PUMP, 750 OASIS W/ PWM
3	**596237M**	2 (250F)	NUT, CENTERLOCK 3/8-16 MAGNI
		4 (750F)	
4	**596635M**	2 (250F)	BOLT, HH 3/8-16 x 1-1/4 MAGNI
		4 (750F)	
5	**600136-01-ZN**	1	HOSE ASSY, 8-8MORB-10FJX90-158
6	**600136-02-ZN**	1	HOSE ASSY, 10-8MORB-10FJX90-158
7	**610013**	1	JIC #8 TO ORING #8
8	**610106**	1	ADAPTER, -10MJIC X -10MORB
9	**800004**	1	DECAL, WARNING-HIGH PRESSURE
10	**830017**	0	SCHEMATIC, HYDRAULIC S-SERIES

Pump Breakdown

See also:

- 550055 ACE 255F-304
- 550056 ACE 255F-304 PWM
- 550018 ACE 750
- 550044 ACE 750 PWM

820127-Pumps-Catalog-Parts-Manual-English.pdf

PRODUCT PLUMBING on BOOM

Plumbing Schematic (830018)

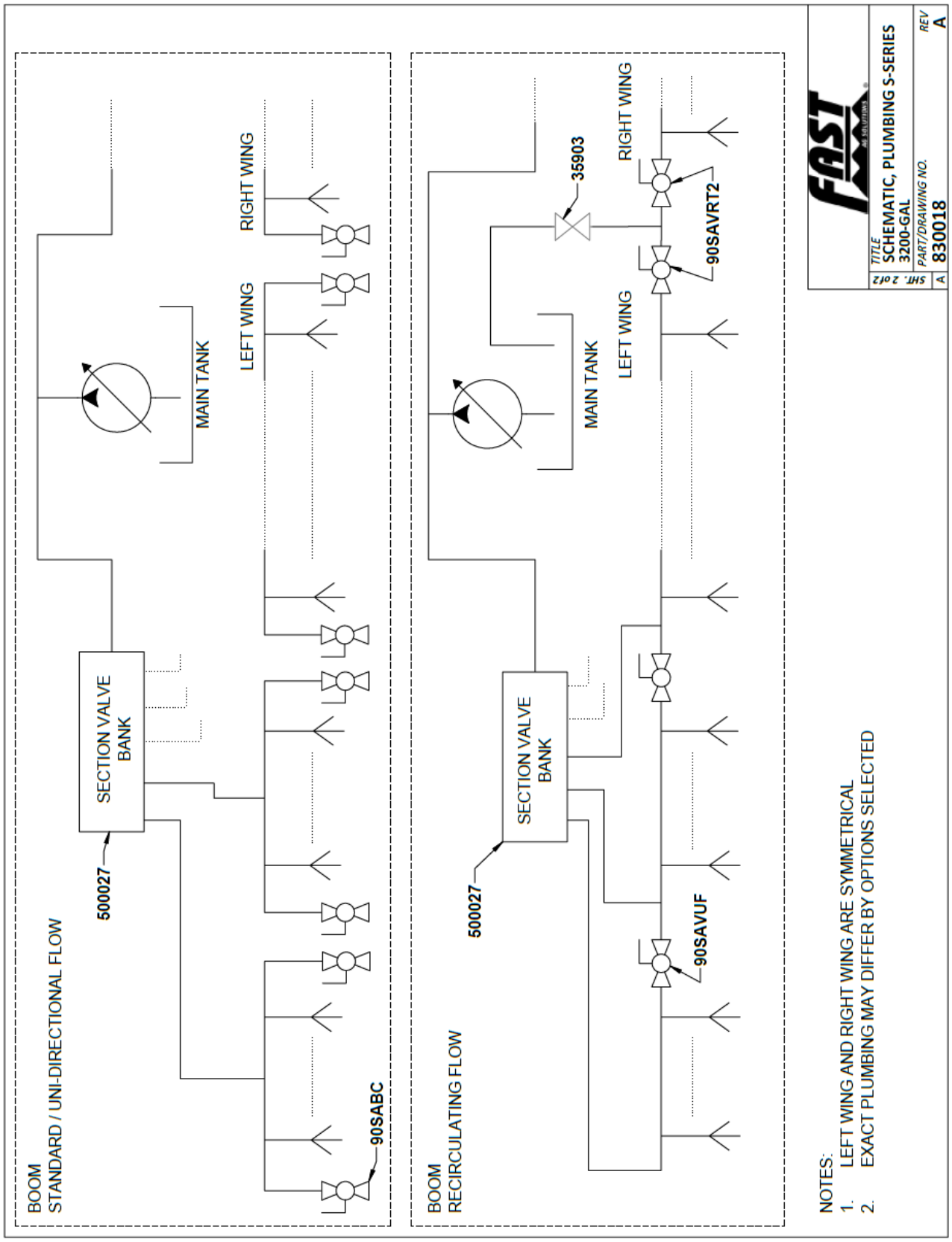

Standard Nozzles

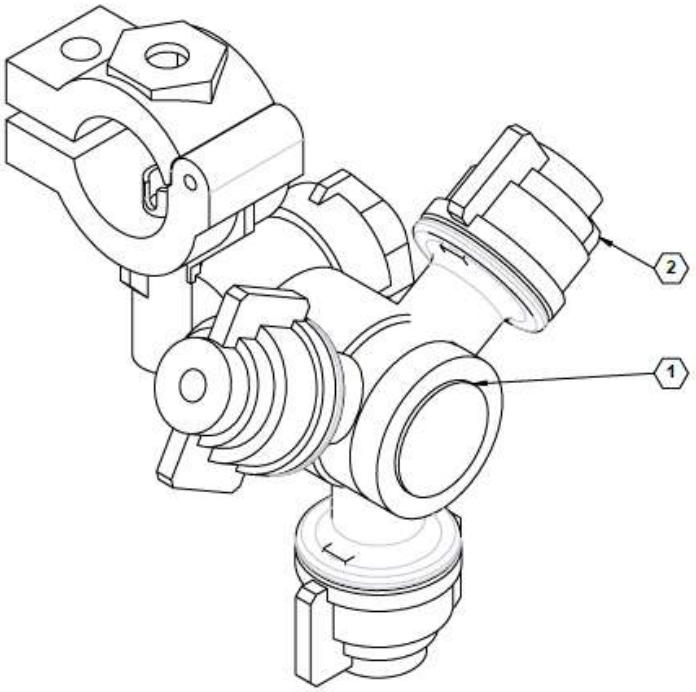

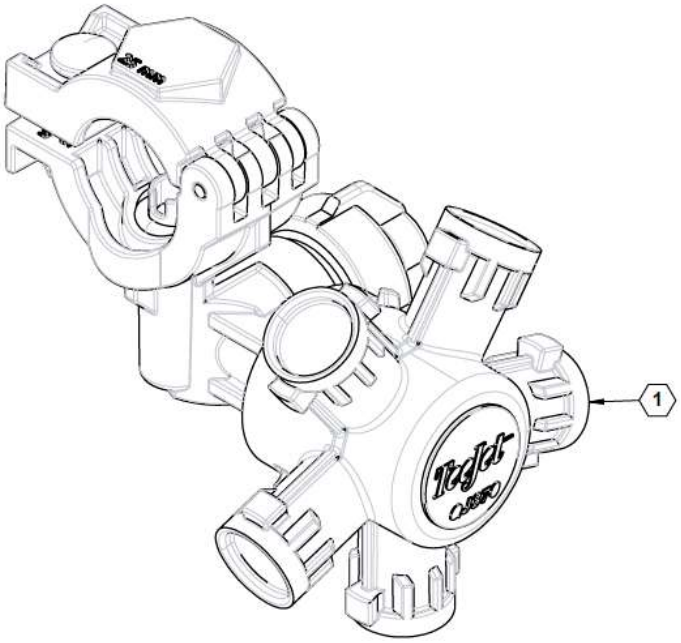

Parts List: Standard Nozzles

ITEM	PART NO.	QTY.	DESCRIPTION
1	**590084**	A.R.	NOZZLE BODY, TRIPLE, 25mm TUBE
	520085	A.R.	NOZZLE BODY, QUINTUPLE, 25mm TUBE
2	**-**	A.R.	NOZZLE TIP, QT AIXR04, RED

Wet Boom Plumbing, Section Overview

06-Section Spacing

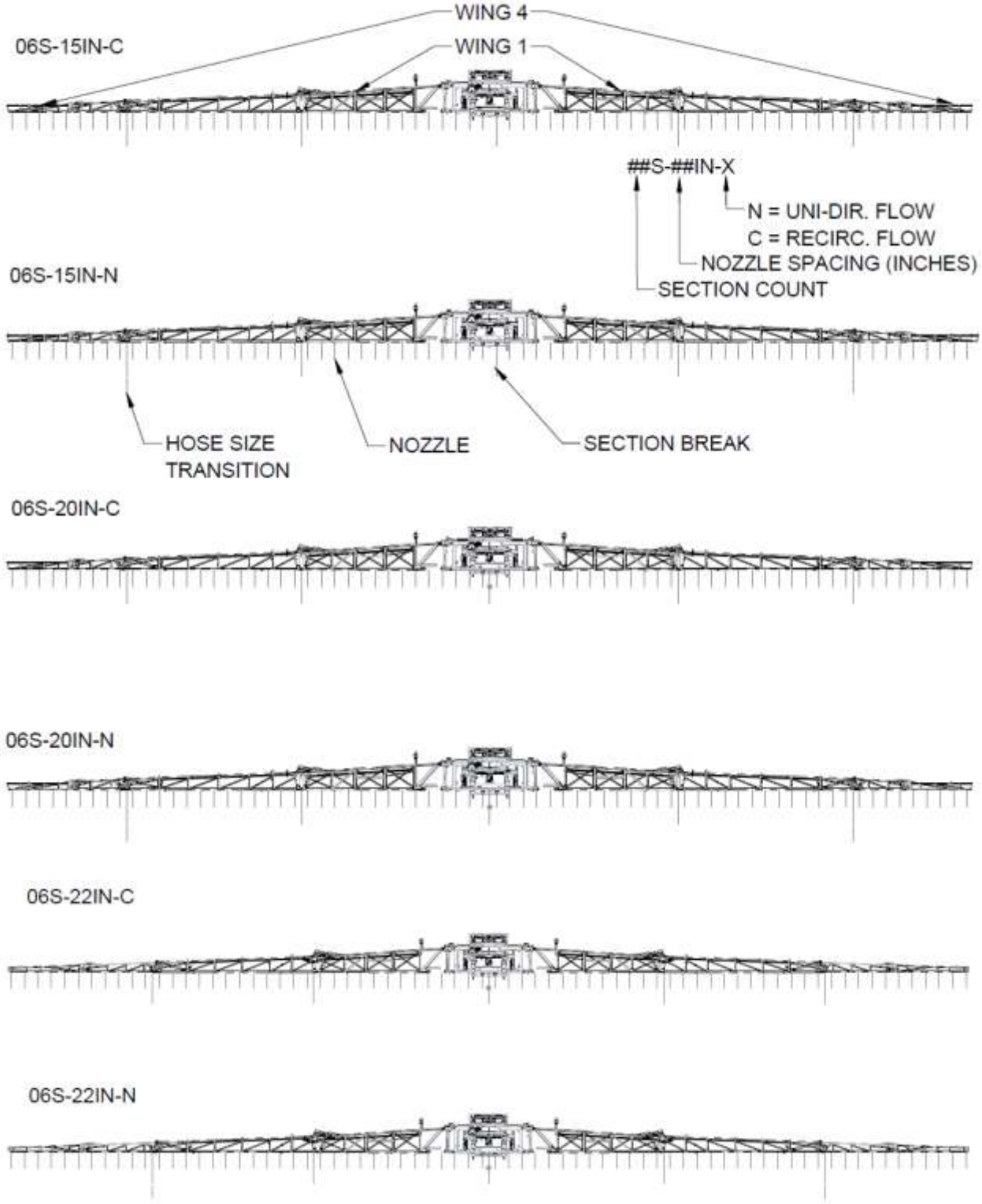

Wet Boom Plumbing, Section Overview (continued)

10-Section Spacing

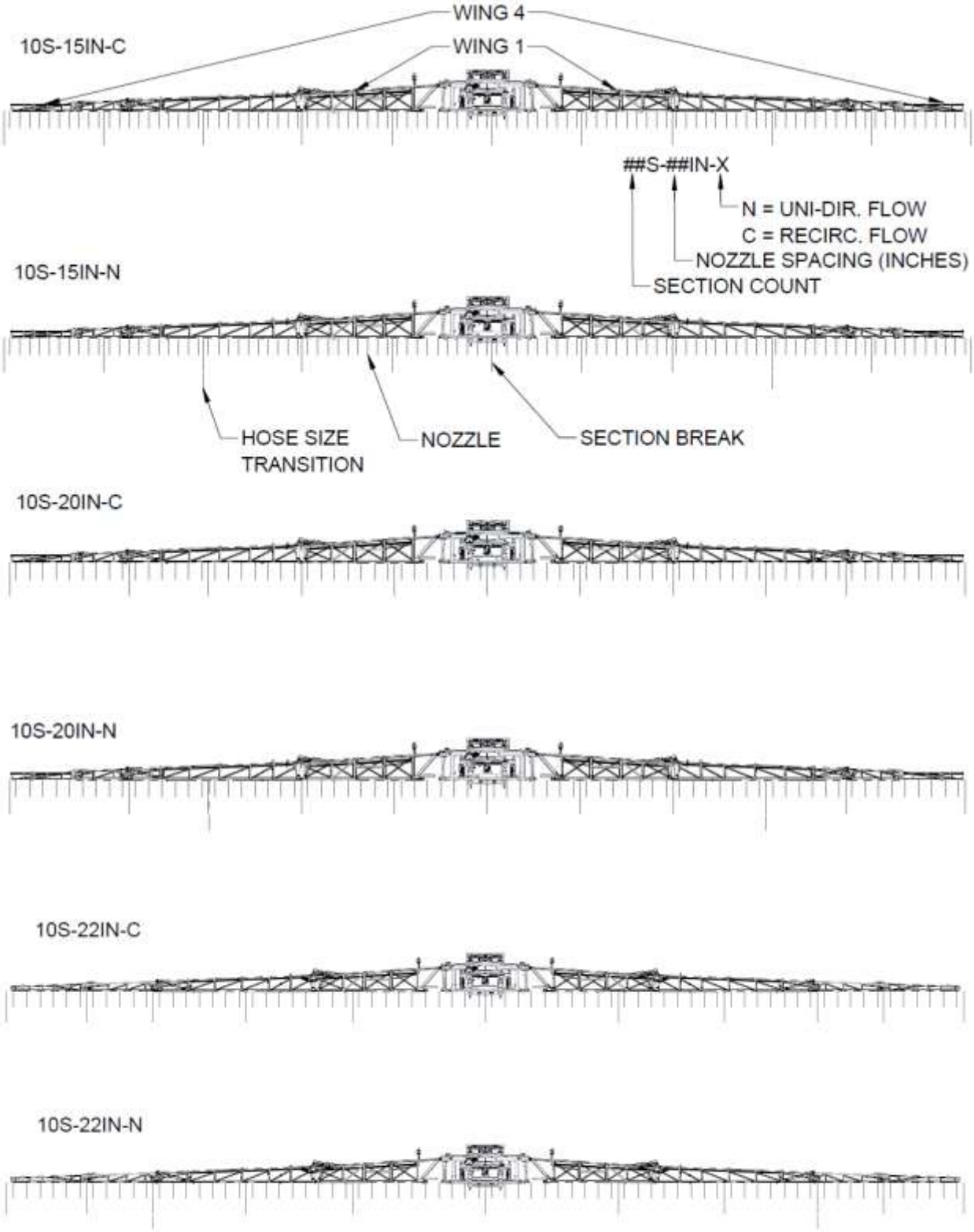

Wet Boom Plumbing – Center – Common Items, 120’ / 132’

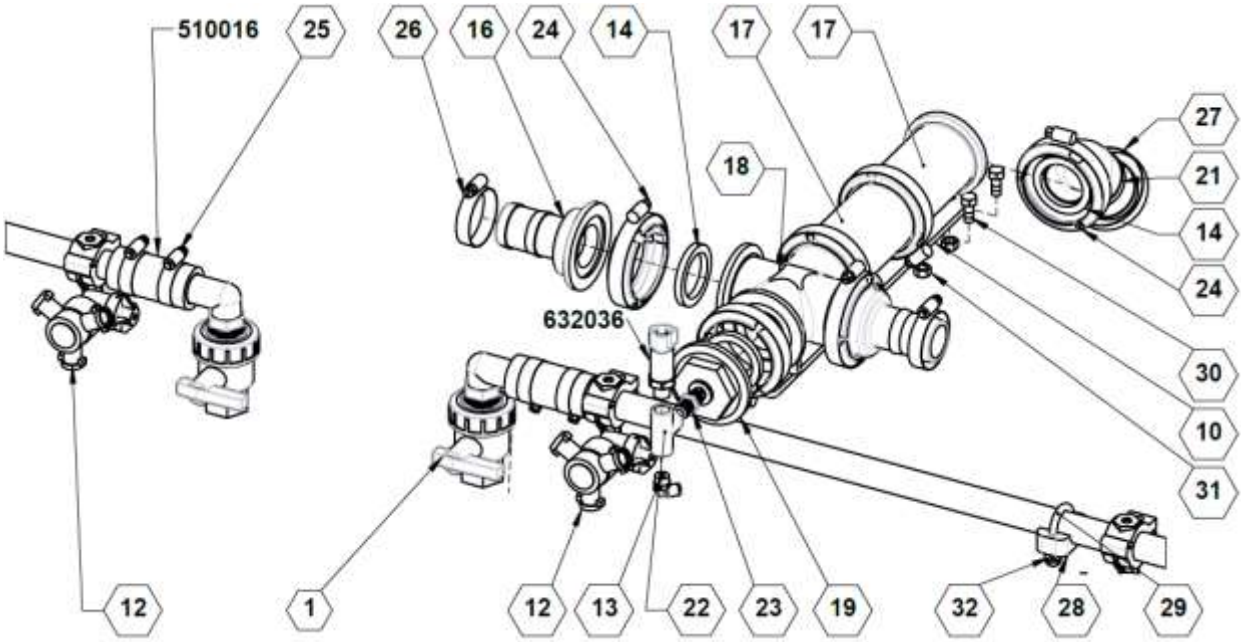

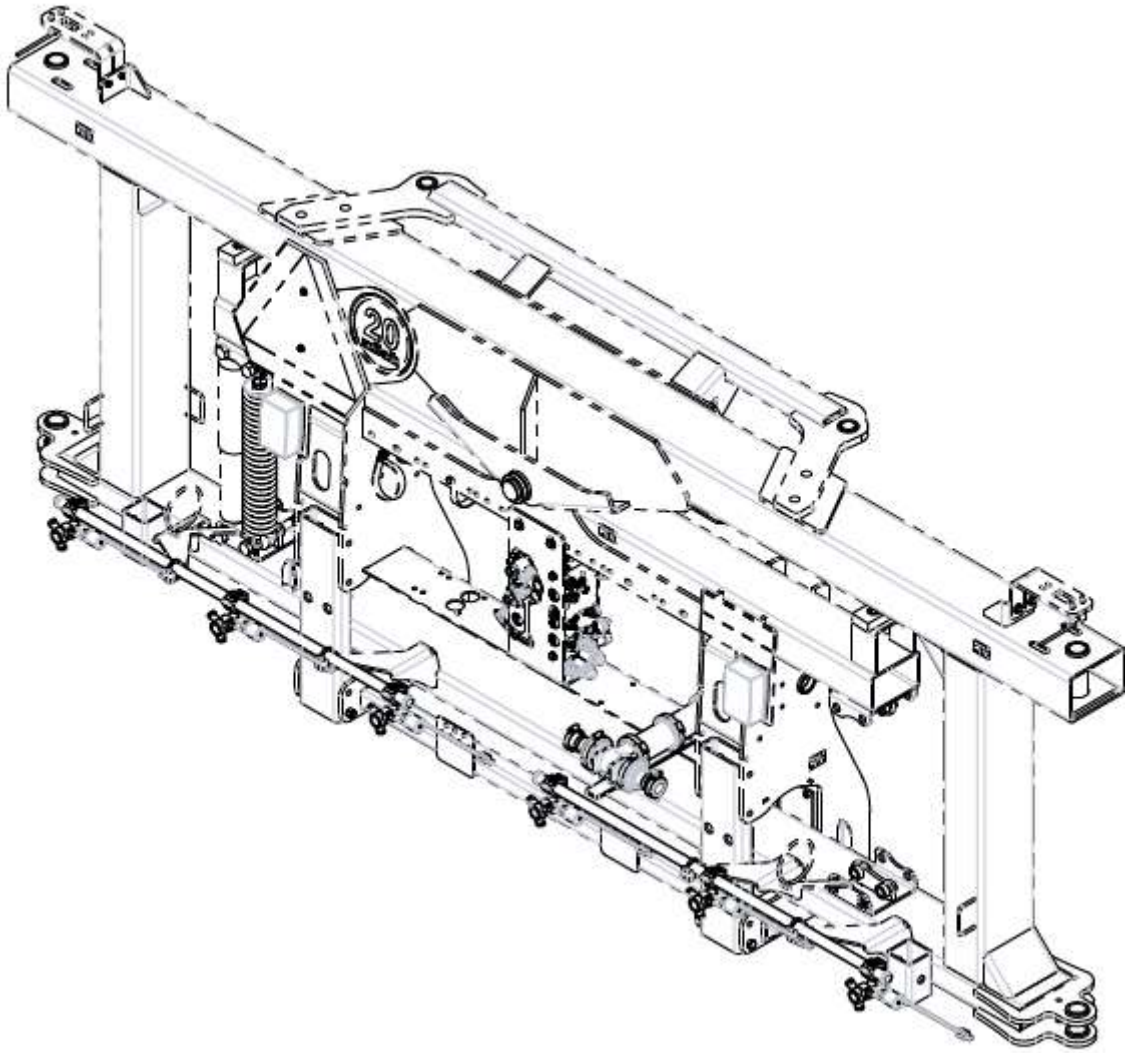

Parts List, Center: Wet Boom Plumbing – Center – Common Items, 120’ / 132’

C	Recirculating / Capstan
N	Uni-Directional / Non-Flowback

#	PART	15IN-C	15IN-N	20IN-C	20IN-N	22IN-C	22IN-N	DESCRIPTION
1	90SABC	2	2	-	2	-	2	ASSY, BOOM CLEAN OUT
10	14324	-	-	-	-	-	-	WET TUBE 4 PORT 22"
12	510016	4.6	3.6	3.6	3.6	3.6	3.6	(FT) HOSE, 1IN EPDM
13	520084	9	9	6	6	6	6	NOZZLE BODY, TRIPLE 25mm
14	530004	-	1	-	1	-	1	FITTING, ELBOW, .250 QC X .250 MPT, 90D
16	530036	1	-	-	-	-	-	ELBOW, .75 MPT X 1.00 HB, 90~
17	530079	2	2	2	2	2	2	MANIFOLD FLANGE, 2" X 1-1/2" HB
18	530084	2	2	2	2	2	2	FLANGE, STD PORT 2" X 2"
19	530090	-	1	-	1	-	1	CROSS, MANIFOLD 2.00
21	530097	1	-	1	-	1	-	MANIFOLD TEE, 2"
22	530181	1	-	-	-	-	-	TEE, .75 MPT X 1.00 HB X 1.00 HB
23	530346	1	1	1	1	1	1	MANIFOLD HB 2 X 45 DEG
24	530400	1	1	1	1	1	1	TEE 1/4" FPT, POLY
25	530401	1	1	1	1	1	1	NIPPLE, 1/4 MPT x 1/4 MPT, POLY
26	540001	5	6	5	6	5	6	CLAMP, 2.00 STD WORM SCREW
27	540014	13	10	11	10	11	10	HOSE CLAMP, SS 1.00 #16
28	540016	2	2	2	2	2	2	CLAMP, SS 1.500 #24
29	540018	1	1	1	1	1	1	CLAMP, 2-3/4" SS
30	540029	4	4	4	4	4	4	CLAMP BODY, 1.00" TUBE, POLY GREEN
31	590048	4	4	4	4	4	4	U-BOLT, 1/4 X 1"
32	596114M	2	2	2	2	2	2	BOLT, HH 5/16-18X3/4 GR5 MAGNI

Wet Boom Plumbing – Center – Section Items, 120’ / 132’

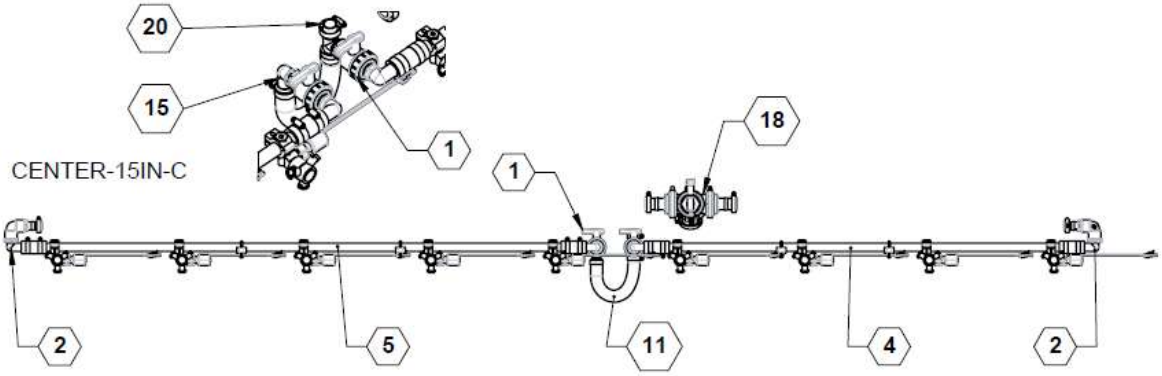

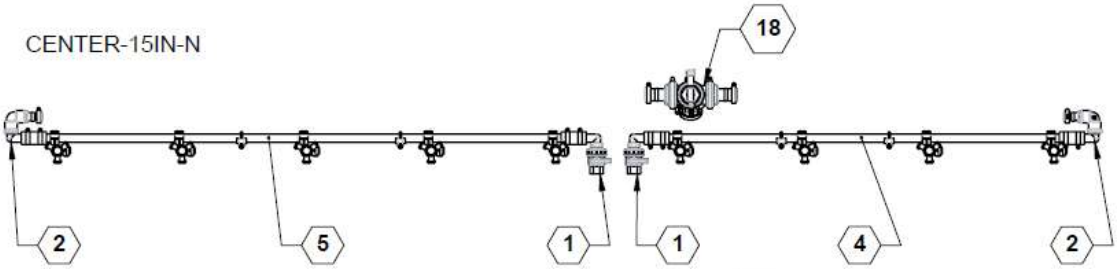

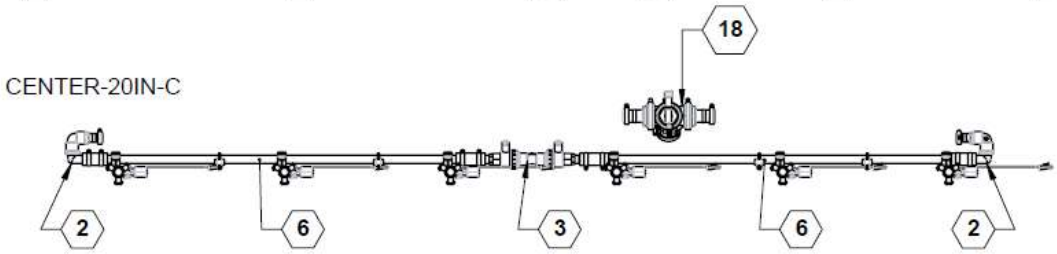

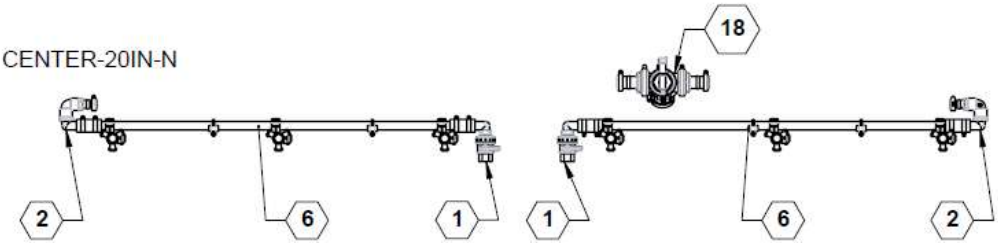

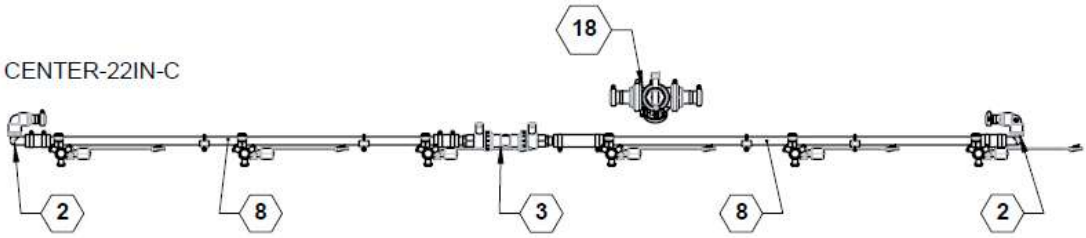

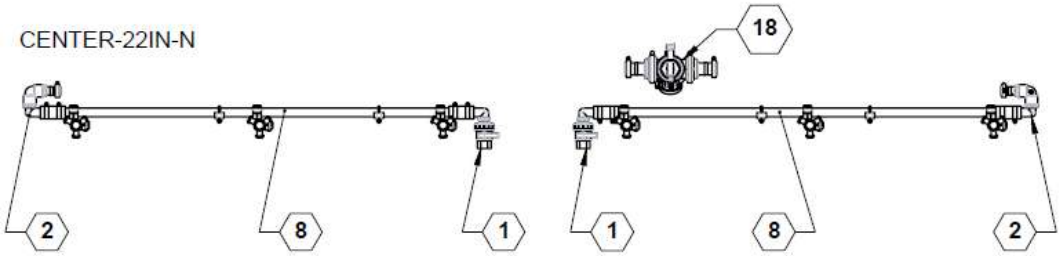

Parts List, Center: Wet Boom Plumbing – Center – Section Items, 120’ / 132’

C	Recirculating / Capstan
N	Uni-Directional / Non-Flowback

#	PART	15IN-C	15IN-N	20IN-C	20IN-N	22IN-C	22IN-N	DESCRIPTION
1	90SABC	2	2	-	2	-	2	ASSY, BOOM CLEAN OUT
2	90SAU	1	2	1	2	1	2	SUB ASSY U-FITTING
3	90SAUPG	1	-	1	-	1	-	ASSY, WET BOOM U-TURN, W/ PRESSURE FITTING
4	90SAVRT2	-	-	1	-	1	-	SUB ASSY, 2 VALVE RECIRC TEE
5	14304	1	1	-	-	-	-	TUBE, 4 PORT 15" WB
6	14305	1	1	-	-	-	-	TUBE, 5 PORT 15" WB
8	14314	-	-	-	-	-	-	TUBE, 4 PORT 20" WB
11	16682	1	1	1	1	1	1	MOUNT, PLUMBING FITTING
15	530014	5	6	5	6	5	6	GASKET, 1.500 EPDM
18	530084	2	2	2	2	2	2	FLANGE, STD PORT 2" X 2"
20	530094	-	1	-	1	-	1	PLUG, MANIFOLD 2.00 W/ HOLE

Wet Boom Plumbing – Wing 1 – Common Items, 120’ / 132’

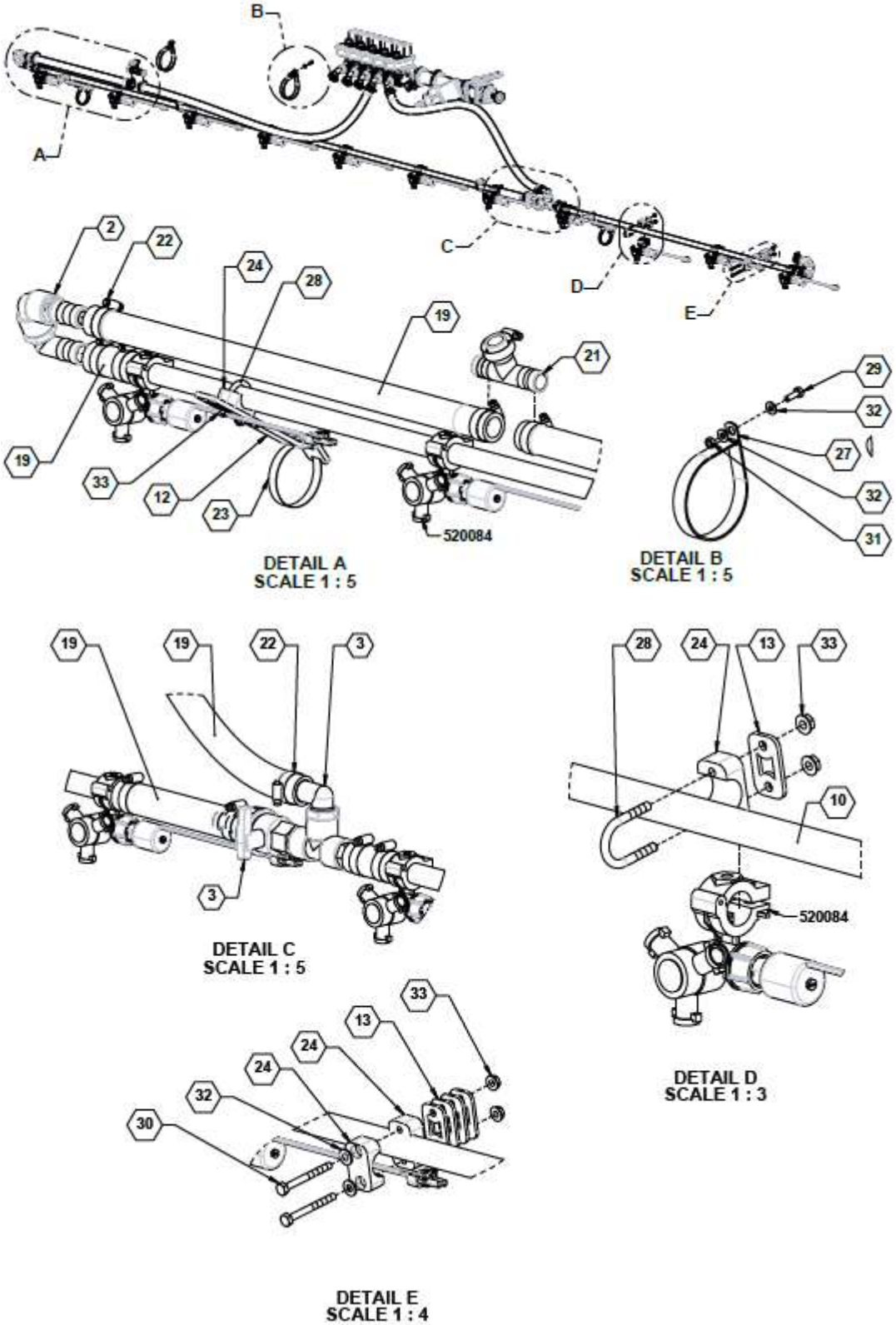

Parts List, Wing 1: Wet Boom Plumbing – Wing 1 – Common Items, 120’ / 132’

#	PART	06S-15IN-C	06S-15IN-N	06S-20IN-C	06S-20IN-N	10S-15IN-C	10S-15IN-N	10S-20IN-C	10S-20IN-N	DESCRIPTION
2	90SAU	2	1	2	1	2	1	2	1	SUB ASSY U-FITTING
3	90SAV UF	-	-	-	-	1	-	1	-	SUB ASSY, VALVE, U FERT.
12	**16271**	2	2	2	2	2	3	2	3	BRACKET, WET BOOM
13	**36203**	5	5	5	5	5	5	5	5	PLATE, TUBE CLAMP SPACER 10-GA
19	**510016**	9.9	5.2	9.9	5.2	13.2	15.8	13.2	15.8	(FT) HOSE, 1IN EPDM
20	**520084**	14	14	11	11	14	14	11	11	NOZZLE BODY, TRIPLE 25mm
21	**530056**	1	1	1	1	1	2	1	2	FITTING, TEE, 1.00 HB, POLY
22	**540014**	11	10	11	10	14	17	14	17	HOSE CLAMP, SS 1.00 #16
23	**540019**	2	2	2	2	2	3	2	3	CLAMP, HOSE 3" SS #48
24	**540029**	8	8	8	8	8	9	8	9	CLAMP BODY, 1.00" TUBE, POLY GREEN
27	**540053**	2	2	2	2	2	2	2	2	P-CLAMP, 4" W/3/8" HOLE
28	**590048**	6	6	6	6	6	7	6	7	U-BOLT, 1/4 X 1"
29	**596101 M**	2	2	2	2	2	4	2	4	BOLT, HH 1/4-20 X 3/4 GR5 MAGNI
30	**596105 M**	2	2	2	2	2	2	2	2	BOLT, HH 1/4-20X2-1/2 GR5 MAGNI
31	**596235 M**	2	2	2	2	2	4	2	4	NUT, CENTERLOCK, 1/4-20 MAGNI
32	**596256 M**	6	6	6	6	6	6	6	6	WASHER, FLAT 1/4 USS MAGNI
33	**596767 M**	14	14	14	14	14	16	14	16	NUT, HEX FLANGE 1/4-20 MAGNI

Wet Boom Plumbing – Wing 2 – Common Items, 120’ / 132’

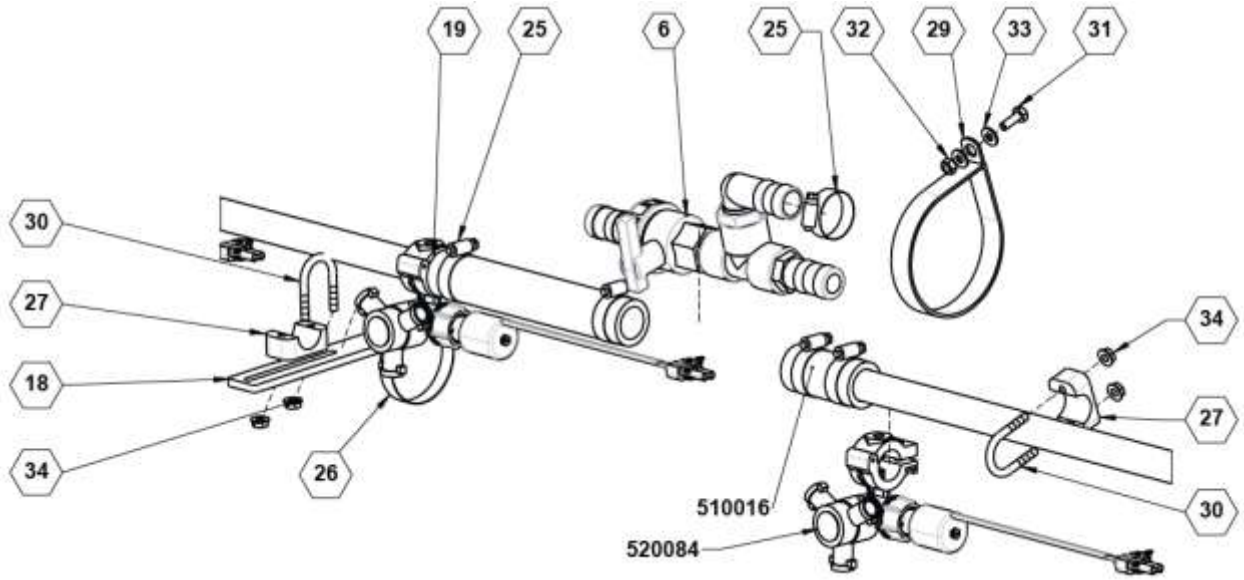

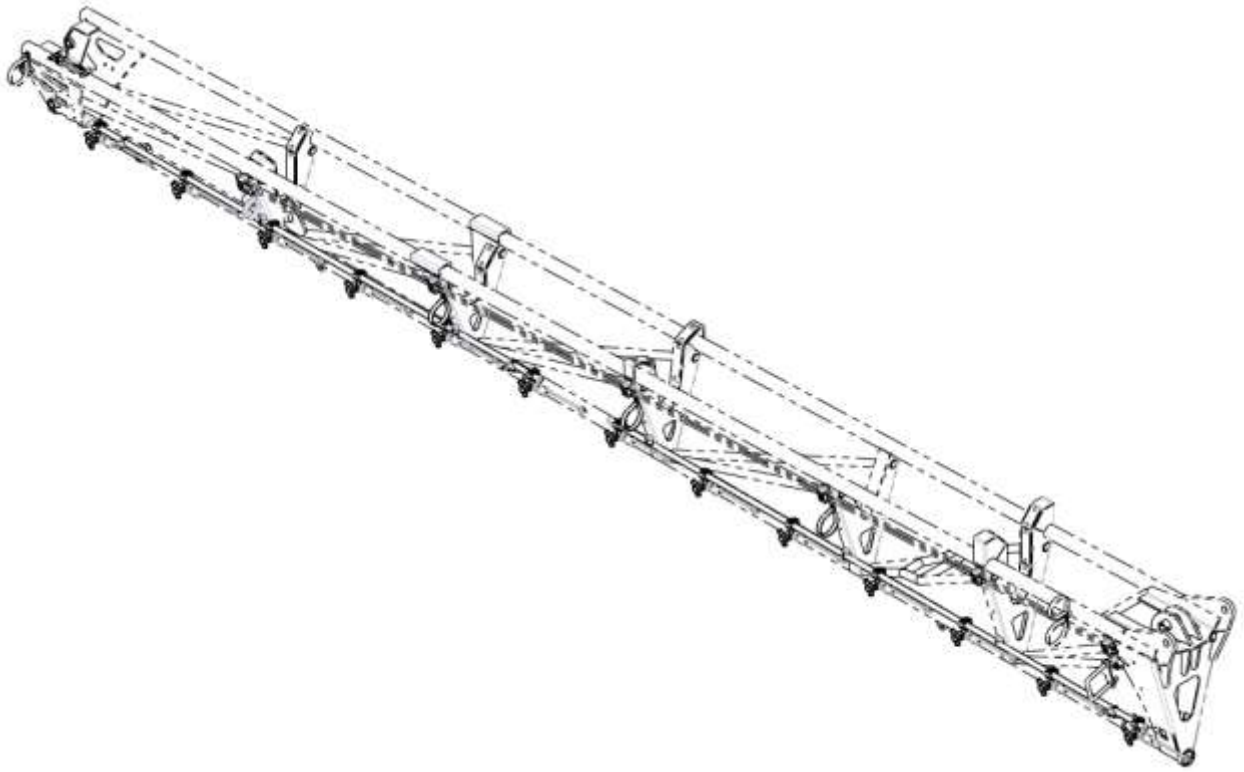

Parts List, Wing 2: Wet Boom Plumbing – Wing 2 – Common Items, 120’ / 132’

C	**Recirculating / Capstan**
N	**Uni-Directional / Non-Flowback**

#	PART	06S-15IN-C	06S-15IN-N	06S-20IN-C	06S-20IN-N	10S-15IN-C	10S-15IN-N	10S-20IN-C	10S-20IN-N	DESCRIPTION
6	**90SAVUF**	-	-	-	-	1	-	1	-	SUB ASSY, VALVE, U FERT.
18	**16271**	2	2	3	3	2	3	3	4	BRACKET, WET BOOM
19	**510016**	1.2	1.2	1.2	1.2	1.5	2.4	1.5	2.4	(FT) HOSE, 1IN EPDM
20	**520084**	18	18	13	13	18	18	13	13	NOZZLE BODY, TRIPLE 25mm
21	**530056**	1	1	-	1	1	1	-	1	FITTING, TEE, 1.00 HB, POLY
25	**540014**	11	9	11	9	14	17	14	17	HOSE CLAMP, SS 1.00 #16
26	**540018**	2	2	3	3	2	3	3	4	CLAMP, 2-3/4" SS
27	**540029**	9	9	8	8	9	10	8	9	CLAMP BODY, 1.00" TUBE, POLY GREEN
29	**540053**	3	3	3	3	3	3	3	3	P-CLAMP, 4" W/3/8"
30	**590048**	9	9	8	8	9	10	8	9	U-BOLT, 1/4 X 1"
31	**596101M**	4	4	4	4	4	4	4	4	BOLT, HH 1/4-20 X 3/4 GR5 MAGNI
32	**596235M**	3	3	3	3	3	3	3	3	NUT, CENTERLOCK, 1/4-20 MAGNI
33	**596256M**	7	7	7	7	7	7	7	7	WASHER, FLAT 1/4 USS MAGNI
34	**596767M**	18	18	16	16	18	20	16	18	NUT, HEX FLANGE 1/4-20 MAGNI

Wet Boom Plumbing – Wing 3 – Common Items, 120’

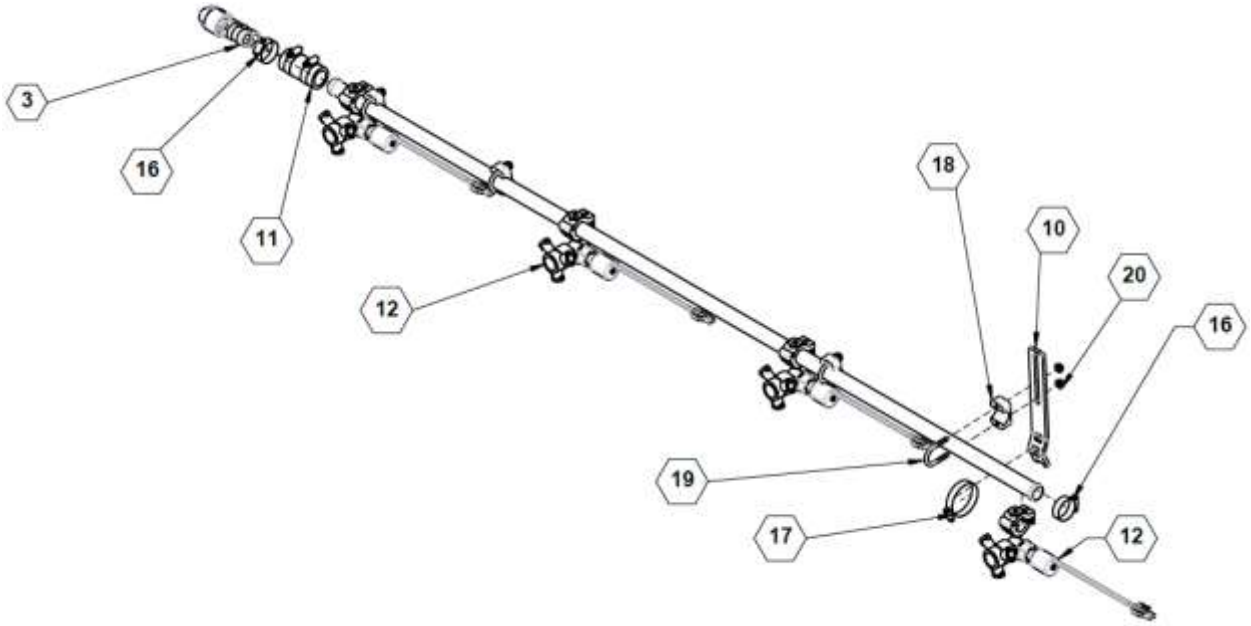

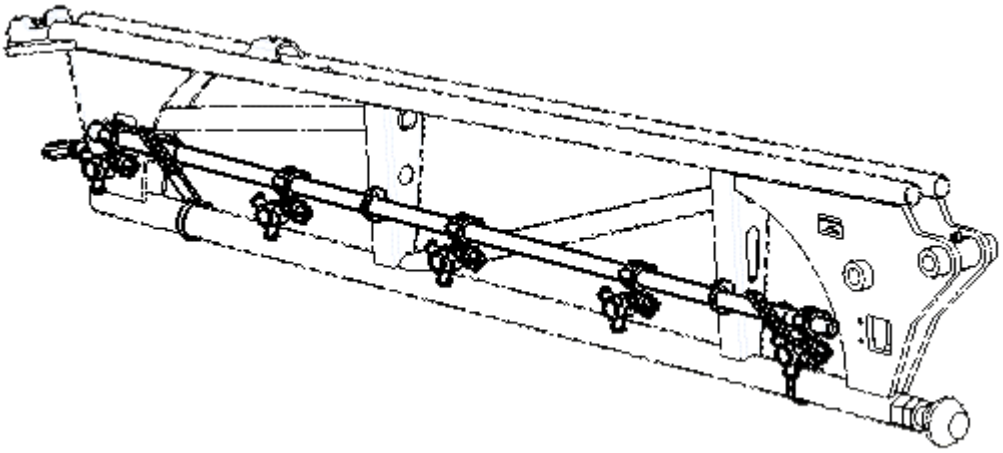

C	**Recirculating / Capstan**
N	**Uni-Directional / Non-Flowback**

Parts List, Wing 3: Wet Boom Plumbing – Wing 3 – Common Items, 120’

#	PART	06S-15IN-C	06S-15IN-N	06S-20IN-C	06S-20IN-N	10S-15IN-C	10S-15IN-N	10S-20IN-C	10S-20IN-N	DESCRIPTION
1	90SABC	-	1	-	-	-	2	-	-	ASSY, BOOM CLEAN OUT
2	90SAFTG 100T07590	-	1	-	1	-	1	-	1	SUB-ASSY, LT; FTTNGS-L,T,2HB
3	90SAU	-	-	1	-	-	-	1	-	SUB ASSY U-FITTING
4	90SAU075	-	-	-	-	-	1	-	-	SUB ASSY U-FITTING
5	90SAVUF	1	-	-	-	1	-	-	-	SUB ASSY, VALVE, U FERT.
10	16271	3	2	1	1	3	3	1	1	BRACKET, WET BOOM
11	510016	0.9	0.6	0.3	0.6	0.9	1.2	0.3	0.6	(FT) HOSE, 1IN EPDM
12	520084	5	5	4	4	5	5	4	4	NOZZLE BODY, TRIPLE 25mm
13	530245	1	-	-	1	1	-	-	1	CAP, .750 FGT, BLACK POLY
14	530275	1	-	-	1	1	-	-	1	FITTING, 3/4" STRAIGHT THREAD X 1" HB, POLY
15	540013	-	1	-	1	-	2	-	1	HOSE CLAMP, SS .75 #12
16	540014	8	5	4	5	8	9	4	5	HOSE CLAMP, SS 1.00 #16
17	540017	3	2	1	1	3	3	1	1	CLAMP, HOSE, 2.00 #32, SS
18	540029	5	4	4	4	5	5	4	4	CLAMP BODY, 1.00" TUBE, POLY GREEN
19	590048	5	4	4	4	5	5	4	4	U-BOLT, 1/4 X 1"
20	596767M	10	8	8	8	10	10	8	8	NUT, HEX FLANGE 1/4-20 MAGNI

Wet Boom Plumbing – Wing 4 – Common Items

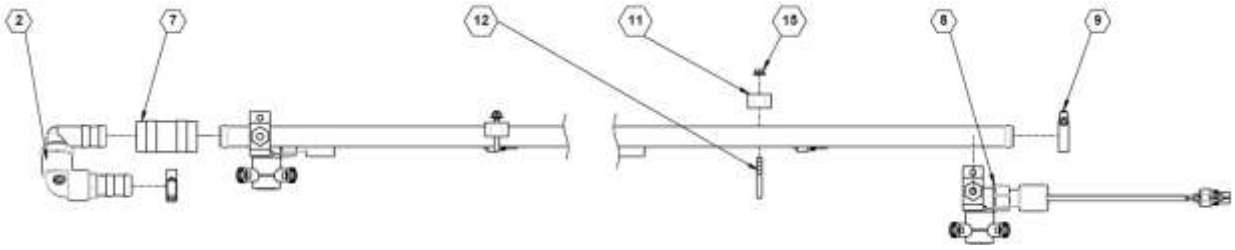

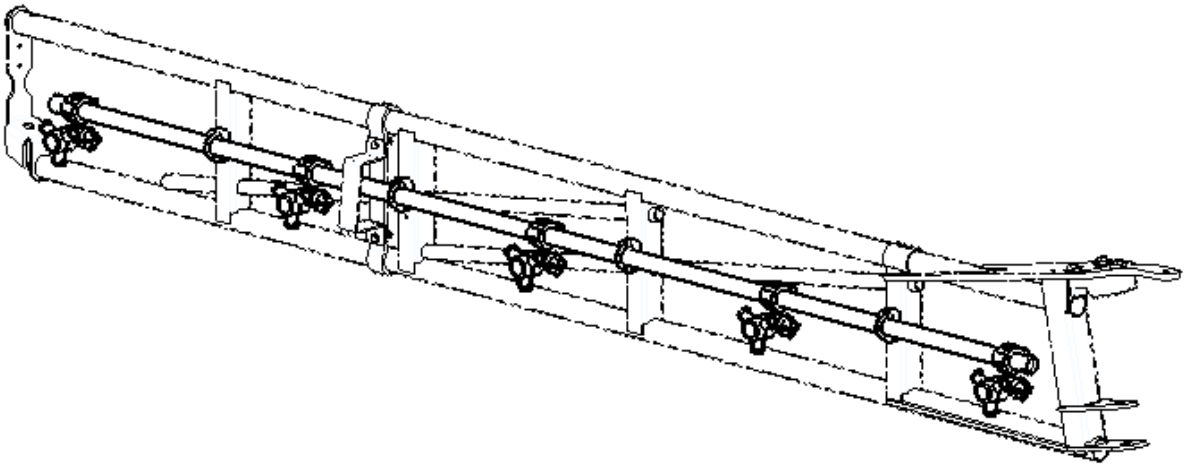

C	Recirculating / Capstan
N	Uni-Directional / Non-Flowback

Parts List, Wing 4: Wet Boom Plumbing – Wing 4 – Common Items

C	Recirculating / Capstan
N	Uni-Directional / Non-Flowback

#	PART	06S-15IN-C	06S-15IN-N	06S-20IN-C	06S-20IN-N	10S-15IN-C	10S-15IN-N	10S-20IN-C	10S-20IN-N	DESCRIPTION
1	90SABC	-	1	-	1	-	1	-	1	ASSY, BOOM CLEAN OUT
2	90SAU	1	-	1	-	1	-	1	-	SUB ASSY U-FITTING
6	**16271**	1	1	-	-	1	1	-	-	BRACKET, WET BOOM
7	**510016**	0.3	0.3	0.3	0.3	0.3	0.3	0.3	0.3	(FT) HOSE, 1IN EPDM
8	**520084**	7	7	5	5	7	7	5	5	NOZZLE BODY, TRIPLE 25mm
9	**540014**	4	3	4	3	4	3	4	3	HOSE CLAMP, SS 1.00 #16
10	**540016**	1	1	-	-	1	1	-	-	CLAMP, SS 1.500 #24
11	**540029**	5	5	4	4	5	5	4	4	CLAMP BODY, 1.00" TUBE, POLY GREEN
12	**590048**	5	5	4	4	5	5	4	4	U-BOLT, 1/4 X 1"
13	**596142M**	2	2	-	-	2	2	-	-	BOLT, HH 7/16 X 2 GR5 MAGNI
14	**596238M**	2	2	-	-	2	2	-	-	NUT, CENTERLOCK 7/16-14 MAGNI
15	**596767M**	10	10	8	8	10	10	8	8	NUT, HEX FLANGE 1/4-20 MAGNI

Wet Boom Plumbing – Wing 1 – 06 Section, 120’

LEFT-06S-15IN-C

LEFT-06S-15IN-N

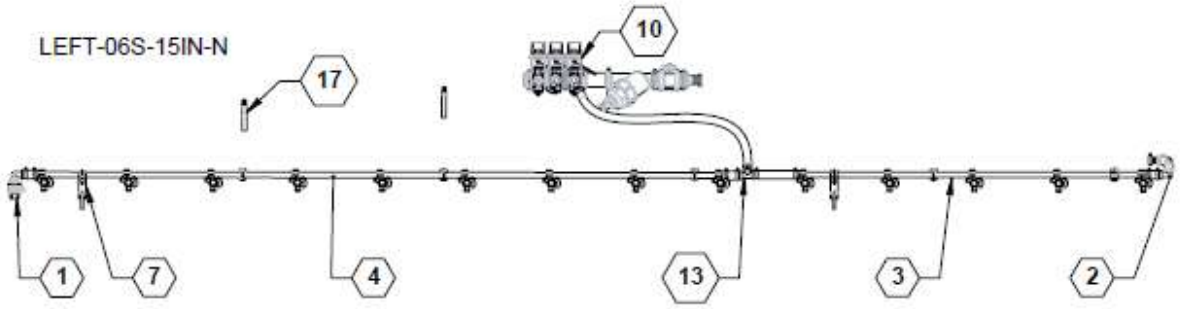

LEFT-06S-20IN-C

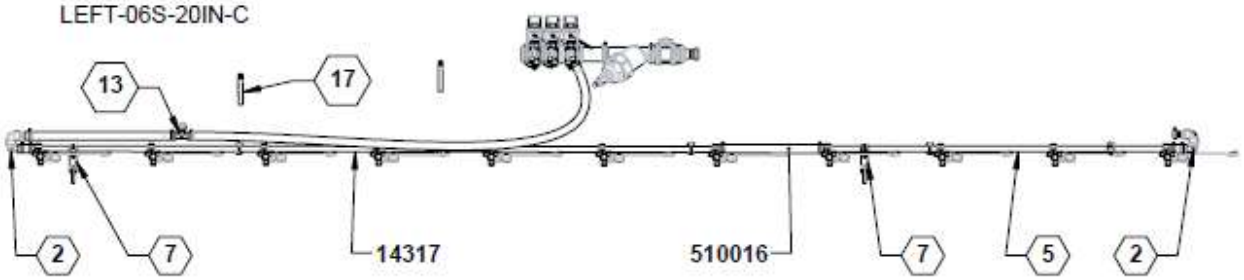

LEFT-06S-20IN-N

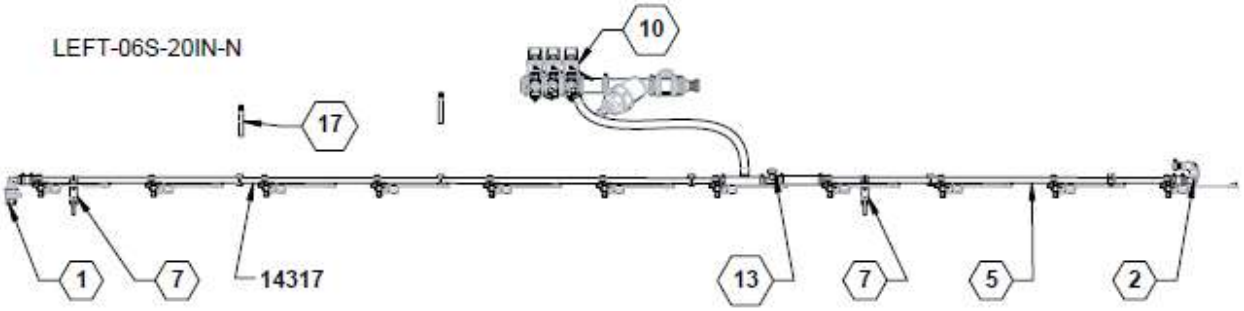

Parts List, Wing 1: Wet Boom Plumbing – Wing 1 – 06 Section, 120’

C	Recirculating / Capstan
N	Uni-Directional / Non-Flowback

NO.	PART	06S-15IN-C	06S-15IN-N	06S-20IN-C	06S-20IN-N	DESCRIPTION
1	90SABC	-	1	-	1	ASSY, BOOM CLEAN OUT
2	90SAU	2	1	2	1	SUB ASSY U-FITTING
3	**14305**	1	1	-	-	TUBE, 5 PORT 15" WB
4	**14309**	1	1	-	-	TUBE, 9 PORT 15"
5	**14314**	-	-	1	1	TUBE, 4 PORT 20" WB
6	**14317**	-	-	1	1	TUBE, 7 PORT 20"
7	**16271**	2	2	2	2	BRACKET, WET BOOM
8	**36203**	5	5	5	5	PLATE, TUBE CLAMP SPACER 10-GA
9	36327	1	-	1	-	ASSEMBLY, BOOM DISTRIBUTION, 6 SECTION, RECIRC'
10	36328	-	1	-	1	ASSEMBLY, BOOM DISTRIBUTION, 6 SECTION, UNI-DIR'
11	**510016**	9.9	5.2	9.9	5.2	(FT) HOSE, 1IN EPDM
12	**520084**	14	14	11	11	NOZZLE BODY, TRIPLE 25mm
13	**530056**	1	1	1	1	FITTING, TEE, 1.00 HB, POLY
14	**540014**	11	10	11	10	HOSE CLAMP, SS 1.00 #16
15	**540019**	2	2	2	2	CLAMP, HOSE 3" SS #48
16	**540029**	8	8	8	8	CLAMP BODY, 1.00" TUBE, POLY GREEN
17	**540053**	2	2	2	2	P-CLAMP, 4" W/3/8" HOLE
18	**590048**	6	6	6	6	U-BOLT, 1/4 X 1"
19	**596101M**	2	2	2	2	BOLT, HH 1/4-20 X 3/4 GR5 MAGNI
20	**596105M**	2	2	2	2	BOLT, HH 1/4-20X2-1/2 GR5 MAGNI
21	**596235M**	2	2	2	2	NUT, CENTERLOCK, 1/4-20 MAGNI
22	**596256M**	6	6	6	6	WASHER, FLAT 1/4 USS MAGNI
23	**596767M**	14	14	14	14	NUT, HEX FLANGE 1/4-20 MAGNI

Wet Boom Plumbing – Wing 2 – 06 Section, 120’

LEFT-06S-15IN-C

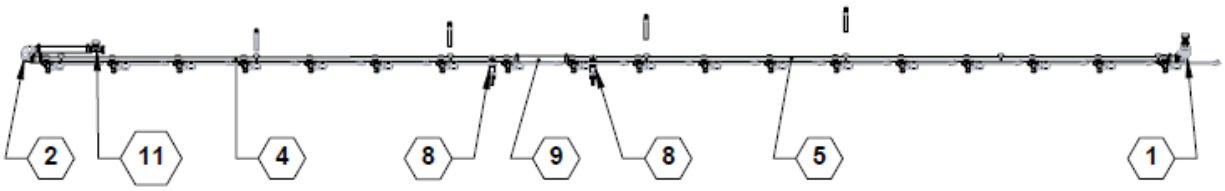

LEFT-06S-15IN-N

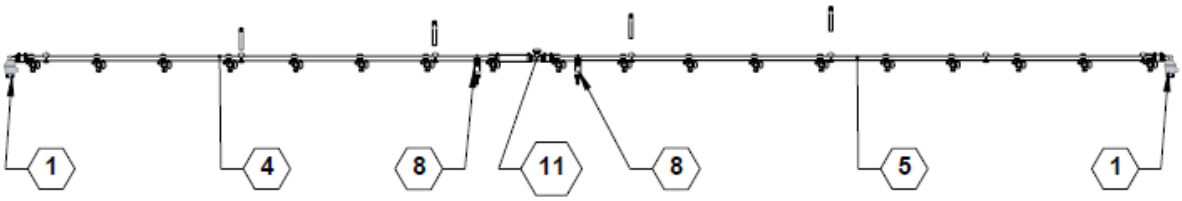

LEFT-06S-20IN-C

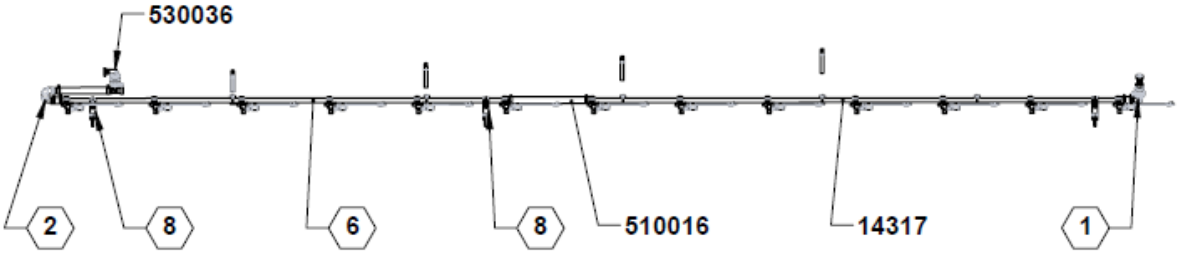

LEFT-06S-20IN-N

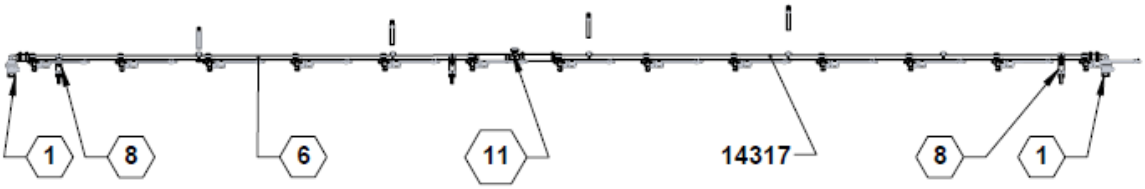

Parts List, Wing 2: Wet Boom Plumbing – Wing 2 – 06 Section, 120’

C	Recirculating / Capstan
N	Uni-Directional / Non-Flowback

#	PART	06S-20IN-C	06S-20IN-N	06S-15IN-C	06S-15IN-N	DESCRIPTION
1	90SABC	1	2	1	2	ASSY, BOOM CLEAN OUT
2	90SAU	1	-	1	-	SUB ASSY U-FITTING
3	90SAVRJ	1	-	-	-	SUB ASSY, RECIRCULATION TEE
4	14308	-	-	1	1	TUBE, 8 PORT 15" WB
5	14310	-	-	1	1	TUBE,10 PORT 15"
6	14316	1	1	-	-	TUBE, 6 PORT 20" WB
7	14317	1	1	-	-	TUBE, 7 PORT 20"
8	16271	3	3	2	2	BRACKET, WET BOOM
9	510016	1.2	1.2	1.2	1.2	(FT) HOSE, 1IN EPDM
10	520084	13	13	18	18	NOZZLE BODY, TRIPLE 25mm
11	530056	-	1	1	1	FITTING, TEE, 1.00 HB, POLY
12	530203	1	-	1	-	FITTING, .750 MNPT X 1.00 HB, POLY
13	540014	11	9	11	9	HOSE CLAMP, SS 1.00 #16
14	540018	3	3	2	2	CLAMP, 2-3/4" SS
15	540029	8	8	9	9	CLAMP BODY, 1.00" TUBE, POLY GREEN
16	540052	1	1	1	1	P-CLAMP, 3" WITH 3/8" HOLE
17	540053	3	3	3	3	P-CLAMP, 4" W/3/8" HOLE
18	590048	8	8	9	9	U-BOLT, 1/4 X 1"
19	596101M	4	4	4	4	BOLT, HH 1/4-20 X 3/4 GR5 MAGNI
20	596235M	3	3	3	3	NUT, CENTERLOCK, 1/4-20 MAGNI
21	596256M	7	7	7	7	WASHER, FLAT 1/4 USS MAGNI
22	596767M	16	16	18	18	NUT, HEX FLANGE 1/4-20 MAGNI

Wet Boom Plumbing – Wing 3 – 06 Section, 120’

LEFT-06S-15IN-C

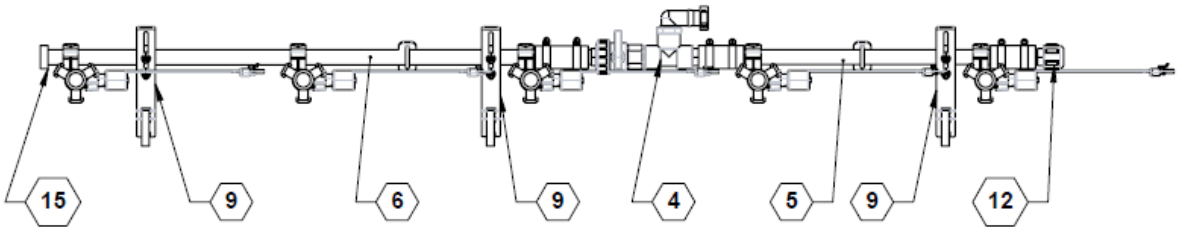

LEFT-06S-15IN-N

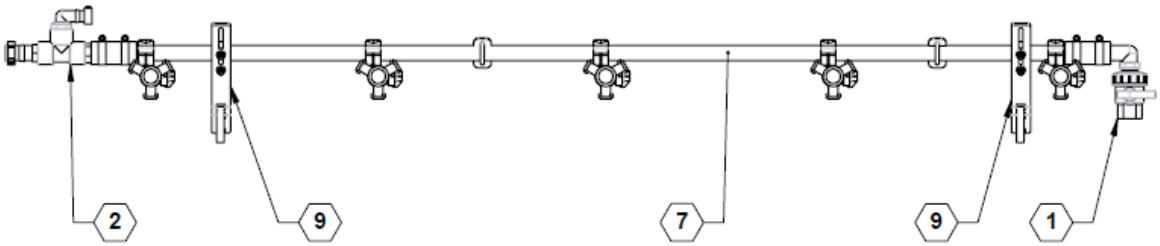

LEFT-06S-20IN-C

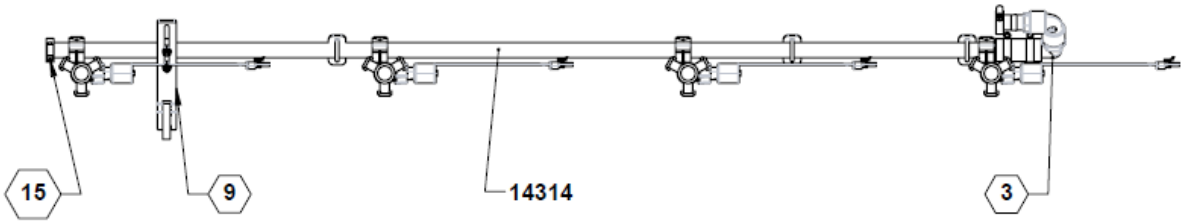

LEFT-06S-20IN-N

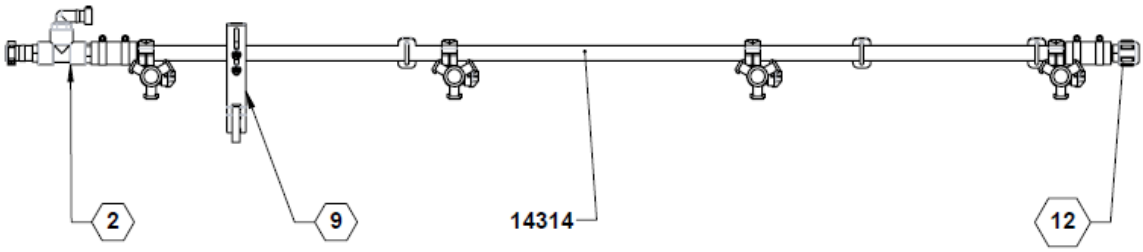

C	**Recirculating / Capstan**
N	**Uni-Directional / Non-Flowback**

Parts List, Wing 3: Wet Boom Plumbing – Wing 3 – 06 Section, 120’

C	Recirculating / Capstan
N	Uni-Directional / Non-Flowback

#	PART	06S-15IN-C	06S-15IN-N	06S-20IN-C	06S-20IN-N	DESCRIPTION
1	90SABC	-	1	-	-	ASSY, BOOM CLEAN OUT
2	90SAFTG 100T07590	-	1	-	1	SUB-ASSY, LT; FTTNGS-L,T,2HB
3	90SAU	-	-	1	-	SUB ASSY U-FITTING
4	90SAVUF	1	-	-	-	SUB ASSY, VALVE, U FERT.
5	14302	1	-	-	-	TUBE, 2 PORT 15" WB
6	14303	1	-	-	-	TUBE, 3 PORT 15" WB
7	14305	-	1	-	-	TUBE, 5 PORT 15" WB
8	14314	-	-	1	1	TUBE, 4 PORT 20" WB
9	16271	3	2	1	1	BRACKET, WET BOOM
10	510016	0.9	0.6	0.3	0.6	(FT) HOSE, 1IN EPDM
11	520084	5	5	4	4	NOZZLE BODY, TRIPLE 25mm
12	530245	1	-	-	1	CAP, .750 FGT, BLACK POLY
13	530275	1	-	-	1	FITTING, 3/4" STRAIGHT THREAD X 1" HB, POLY
14	540013	-	1	-	1	HOSE CLAMP, SS .75 #12
15	540014	8	5	4	5	HOSE CLAMP, SS 1.00 #16
16	540017	3	2	1	1	CLAMP, HOSE, 2.00 #32, SS
17	540029	5	4	4	4	CLAMP BODY, 1.00" TUBE, POLY GREEN
18	590048	5	4	4	4	U-BOLT, 1/4 X 1"
19	596767M	10	8	8	8	NUT, HEX FLANGE 1/4-20 MAGNI

Wet Boom Plumbing – Wing 4 – 06 Section, 120’

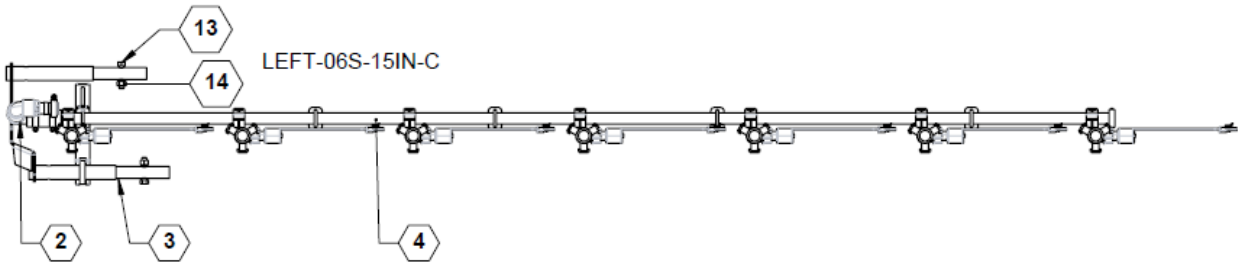

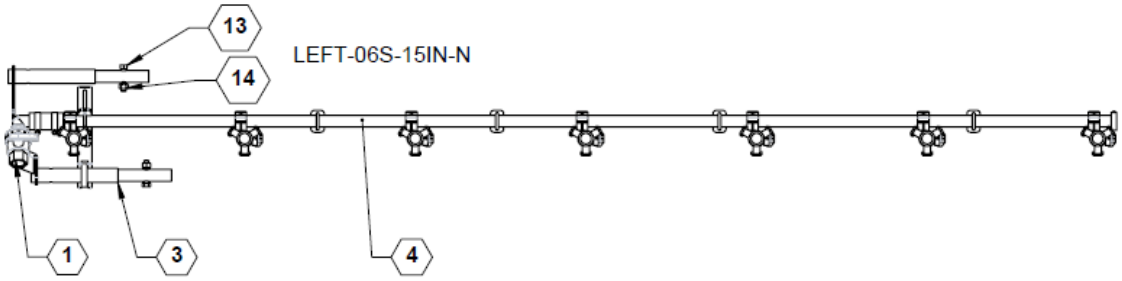

LEFT-06S-20IN-C

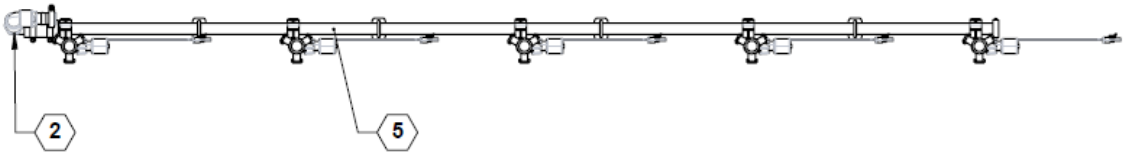

LEFT-06S-20IN-N

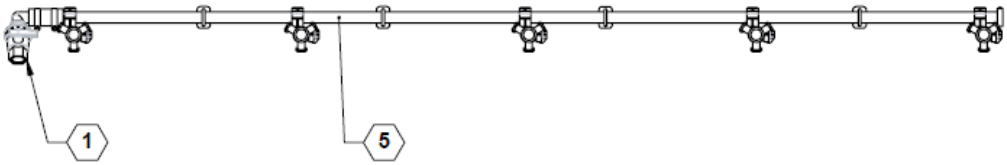

C	**Recirculating / Capstan**
N	**Uni-Directional / Non-Flowback**

Parts List, Wing 4: Wet Boom Plumbing – Wing 4 – 06 Section, 120’

C	**Recirculating / Capstan**
N	**Uni-Directional / Non-Flowback**

#	PART	06S-15IN-C	06S-15IN-N	06S-20IN-C	06S-20IN-N	DESCRIPTION
1	**90SABC**	-	1	-	1	ASSY, BOOM CLEAN OUT
2	**90SAU**	1	-	1	-	SUB ASSY U-FITTING
3	**14295**	1	1	-	-	EXTENSION, 15" FAST
4	**14307**	1	1	-	-	TUBE, 7 PORT 15" WB
5	**14315**	-	-	1	1	TUBE, 5 PORT 20" WB
6	**16271**	1	1	-	-	BRACKET, WET BOOM
7	**510016**	0.3	0.3	0.3	0.3	(FT) HOSE, 1IN EPDM
8	**520084**	7	7	5	5	NOZZLE BODY, TRIPLE 25mm
9	**540014**	4	3	4	3	HOSE CLAMP, SS 1.00 #16
10	**540016**	1	1	-	-	CLAMP, SS 1.500 #24
11	**540029**	5	5	4	4	CLAMP BODY, 1.00" TUBE, POLY GREEN
12	**590048**	5	5	4	4	U-BOLT, 1/4 X 1"
13	**596142M**	2	2	-	-	BOLT, HH 7/16 X 2 GR5 MAGNI
14	**596238M**	2	2	-	-	NUT, CENTERLOCK 7/16-14 MAGNI
15	**596767M**	10	10	8	8	NUT, HEX FLANGE 1/4-20 MAGNI

Wet Boom Plumbing – Wing 1 – 10 Section, 120’

LEFT-10S-15IN-C

LEFT-10S-15IN-N

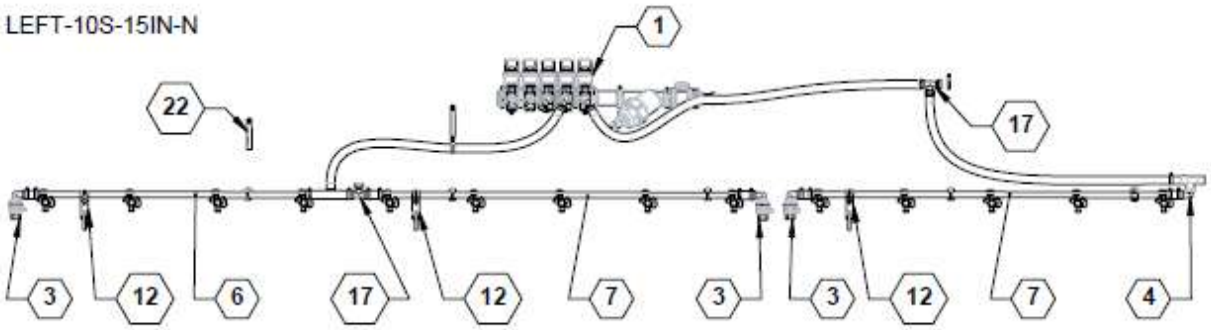

LEFT-10S-20IN-C

LEFT-10S-20IN-N

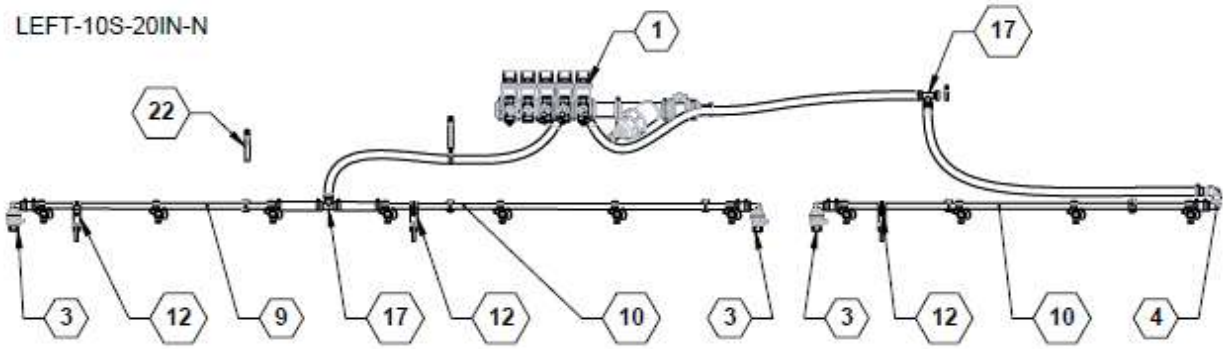

Parts List, Wing 1: Wet Boom Plumbing – Wing 1 – 10 Section, 120’

C	Recirculating / Capstan
N	Uni-Directional / Non-Flowback

NO.	PART	06S-15IN-C	06S-15IN-N	06S-20IN-C	06S-20IN-N	DESCRIPTION
3	90SABC	3	3	-	-	ASSY, BOOM CLEAN OUT
4	90SAU	1	1	2	2	SUB ASSY U-FITTING
5	90SAVUF	-	-	1	1	SUB ASSY, VALVE, U FERT.
6	14304	1	-	-	-	TUBE, 4 PORT 15" WB
7	14305	2	-	-	1	TUBE, 5 PORT 15" WB
8	14309	-	-	-	1	TUBE, 9 PORT 15"
9	14313	-	1	-	-	TUBE, 3 PORT 20" WB
10	14314	-	2	1	-	TUBE, 4 PORT 20" WB
11	14317	-	-	1	-	TUBE, 7 PORT 20"
12	16271	3	3	2	2	BRACKET, WET BOOM
13	36203	5	5	5	5	PLATE, TUBE CLAMP SPACER 10-GA
2	36205	-	-	1	1	ASSEMBLY, BOOM DISTRIBUTION, 10 SECTION, RECIRC'
1	36204	1	1	-	-	ASSEMBLY, BOOM DISTRIBUTION, 10 SECTION, UNI-DIR'
15	510016	15.8	15.8	13.2	13.2	(FT) HOSE, 1IN EPDM
16	520084	14	11	11	14	NOZZLE BODY, TRIPLE 25mm
17	530056	2	2	1	1	FITTING, TEE, 1.00 HB, POLY
18	540014	17	17	14	14	HOSE CLAMP, SS 1.00 #16
19	540019	3	3	2	2	CLAMP, HOSE 3" SS #48
20	540029	9	9	8	8	CLAMP BODY, 1.00" TUBE, POLY GREEN
21	540048	2	2	-	-	CLAMP, LOOP, 1.50, .50 WIDE, W/ .281 HOLE, VINYL COATED
22	540053	2	2	2	2	P-CLAMP, 4" W/3/8" HOLE
23	590048	7	7	6	6	U-BOLT, 1/4 X 1"
24	596101M	4	4	2	2	BOLT, HH 1/4-20 X 3/4 GR5 MAGNI
25	596105M	2	2	2	2	BOLT, HH 1/4-20X2-1/2 GR5 MAGNI
26	596235M	4	4	2	2	NUT, CENTERLOCK, 1/4-20 MAGNI
27	596256M	6	6	6	6	WASHER, FLAT 1/4 USS MAGNI
28	596767M	16	16	14	14	NUT, HEX FLANGE 1/4-20 MAGNI

Wet Boom Plumbing – Wing 2 – 10 Section, 120’

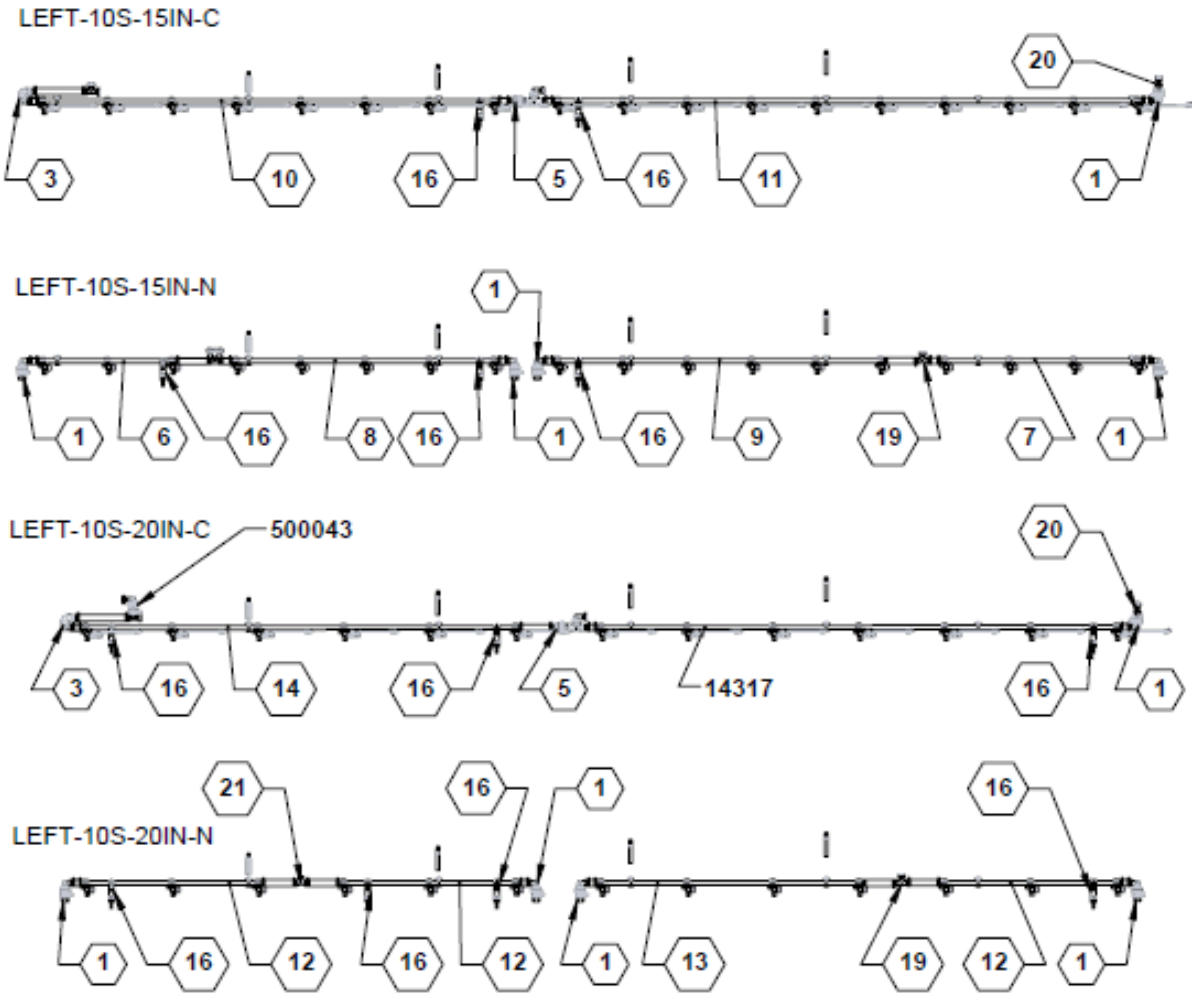

C	**Recirculating / Capstan**
N	**Uni-Directional / Non-Flowback**

Parts List, Wing 2: Wet Boom Plumbing – Wing 2 – 10 Section, 120’

#	PART	10S-15IN-C	10S-15IN-N	10S-20IN-C	10S-20IN-N	DESCRIPTION
1	90SABC	1	4	1	4	ASSY, BOOM CLEAN OUT
2	90SAFTG 100T075T	-	1	-	-	FITTING ASSY, TEE .75 MPT X 1.00 HB W/ TEE .75 FPT X .75 HB
3	90SAU	1	-	1	-	SUB ASSY U-FITTING
4	90SAVRJ	-	-	1	-	SUB ASSY, RECIRCULATION TEE
5	90SAVUF	1	-	1	-	SUB ASSY, VALVE, U FERT.
6	14303	-	1	-	-	TUBE, 3 PORT 15" WB
7	14304	-	1	-	-	TUBE, 4 PORT 15" WB
8	14305	-	1	-	-	TUBE, 5 PORT 15" WB
9	14306	-	1	-	-	TUBE, 6 PORT 15" WB
10	14308	1	-	-	-	TUBE, 8 PORT 15" WB
11	14310	1	-	-	-	TUBE,10 PORT 15"
12	14313	-	-	-	3	TUBE, 3 PORT 20" WB
13	14314	-	-	-	1	TUBE, 4 PORT 20" WB
14	14316	-	-	1	-	TUBE, 6 PORT 20" WB
15	14317	-	-	1	-	TUBE, 7 PORT 20"
16	16271	2	3	3	4	BRACKET, WET BOOM
17	510016	1.5	2.4	1.5	2.4	(FT) HOSE, 1IN EPDM
18	520084	18	18	13	13	NOZZLE BODY, TRIPLE 25mm
19	530056	1	1	-	1	FITTING, TEE, 1.00 HB, POLY
20	530203	1	-	1	-	FITTING, .750 MNPT X 1.00 HB, POLY
21	530241	-	-	-	1	Hose Barb Tee 1 x 1 x .75
22	540013	-	2	-	1	HOSE CLAMP, SS .75 #12
23	540014	14	17	14	17	HOSE CLAMP, SS 1.00 #16
24	540018	2	3	3	4	CLAMP, 2-3/4" SS
25	540029	9	10	8	9	CLAMP BODY, 1.00" TUBE, POLY GREEN
26	540052	1	1	1	1	P-CLAMP, 3" WITH 3/8" HOLE
27	540053	3	3	3	3	P-CLAMP, 4" W/3/8" HOLE
28	590048	9	10	8	9	U-BOLT, 1/4 X 1"
29	596101M	4	4	4	4	BOLT, HH 1/4-20 X 3/4 GR5 MAGNI
30	596235M	3	3	3	3	NUT, CENTERLOCK, 1/4-20 MAGNI
31	596256M	7	7	7	7	WASHER, FLAT 1/4 USS MAGNI
32	596767M	18	20	16	18	NUT, HEX FLANGE 1/4-20 MAGNI

Wet Boom Plumbing – Wing 3 – 10 Section, 120’

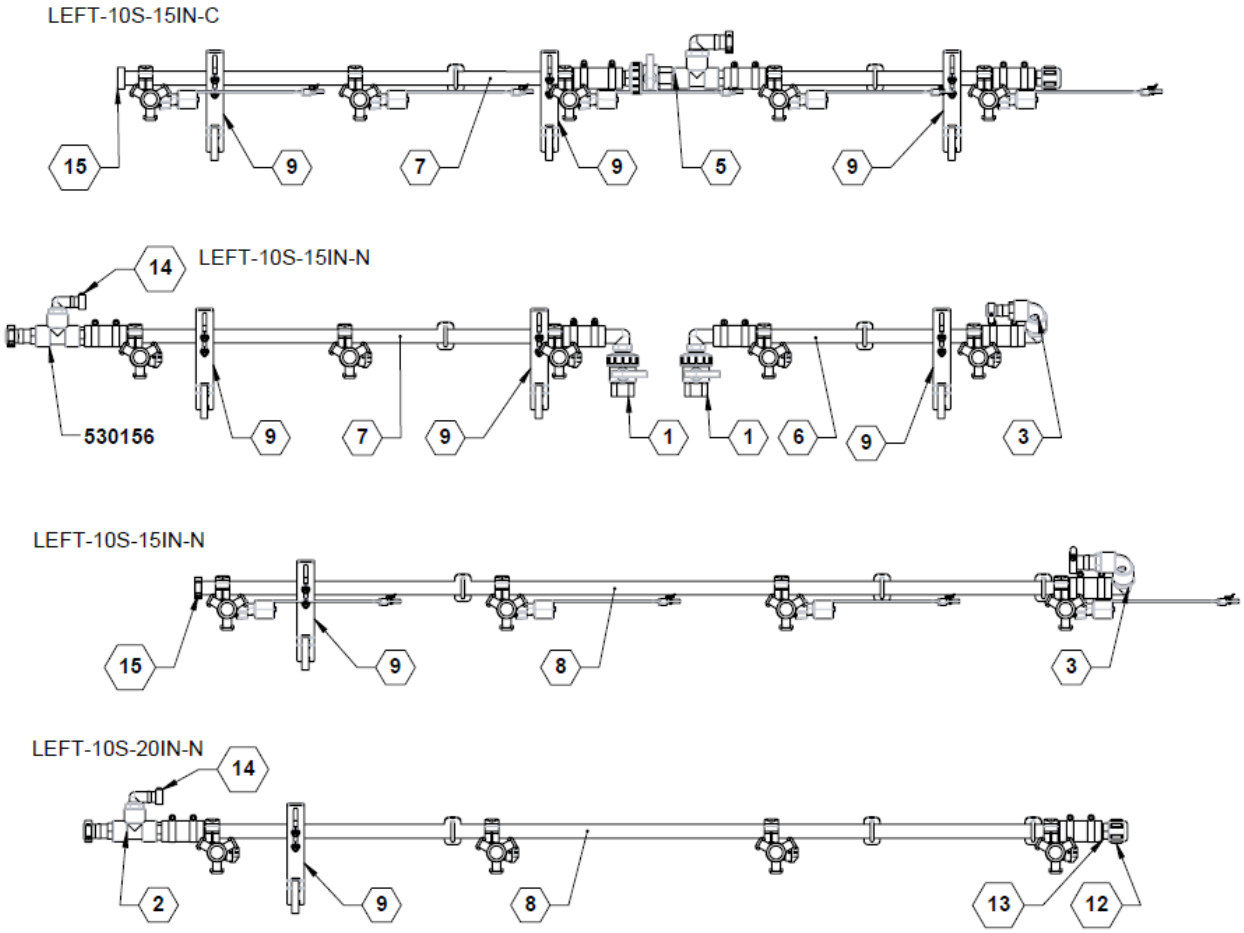

C	**Recirculating / Capstan**
N	**Uni-Directional / Non-Flowback**

Parts List, Wing 3: Wet Boom Plumbing – Wing 3 – 10 Section, 120’

C	Recirculating / Capstan
N	Uni-Directional / Non-Flowback

#	PART	10S-15IN-C	10S-15IN-N	10S-20IN-C	10S-20IN-N	DESCRIPTION
1	90SABC	-	2	-	-	ASSY, BOOM CLEAN OUT
2	90SAFTG 100T07590	-	1	-	1	SUB-ASSY, LT; FTTNGS-L,T,2HB
3	90SAU	-	-	1	-	SUB ASSY U-FITTING
4	90SAU075	-	1	-	-	SUB ASSY U-FITTING
5	90SAVUF	1	-	-	-	SUB ASSY, VALVE, U FERT.
6	14302	1	1	-	-	TUBE, 2 PORT 15" WB
7	14303	1	1	-	-	TUBE, 3 PORT 15" WB
8	14314	-	-	1	1	TUBE, 4 PORT 20" WB
9	16271	3	3	1	1	BRACKET, WET BOOM
10	510016	0.9	1.2	0.3	0.6	(FT) HOSE, 1IN EPDM
11	520084	5	5	4	4	NOZZLE BODY, TRIPLE 25mm
12	530245	1	-	-	1	CAP, .750 FGT, BLACK POLY
13	530275	1	-	-	1	FITTING, 3/4" STRAIGHT THREAD X 1" HB, POLY
14	540013	-	2	-	1	HOSE CLAMP, SS .75 #12
15	540014	8	9	4	5	HOSE CLAMP, SS 1.00 #16
16	540017	3	3	1	1	CLAMP, HOSE, 2.00 #32, SS
17	540029	5	5	4	4	CLAMP BODY, 1.00" TUBE, POLY GREEN
18	590048	5	5	4	4	U-BOLT, 1/4 X 1"
19	596767M	10	10	8	8	NUT, HEX FLANGE 1/4-20 MAGNI

Wet Boom Plumbing – Wing 4 – 10 Section, 120’

LEFT-10S-15IN-C

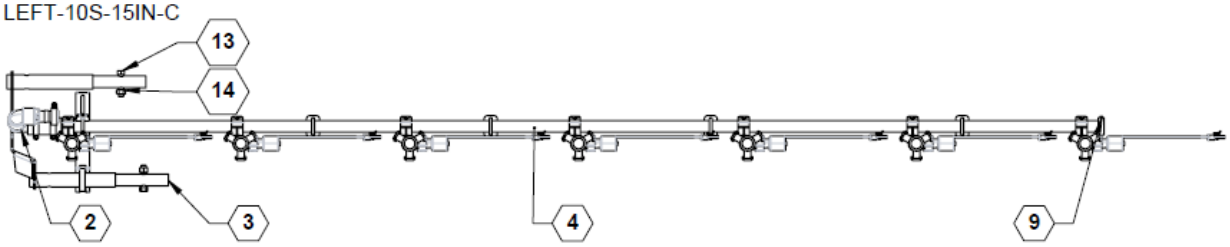

LEFT-10S-15IN-N

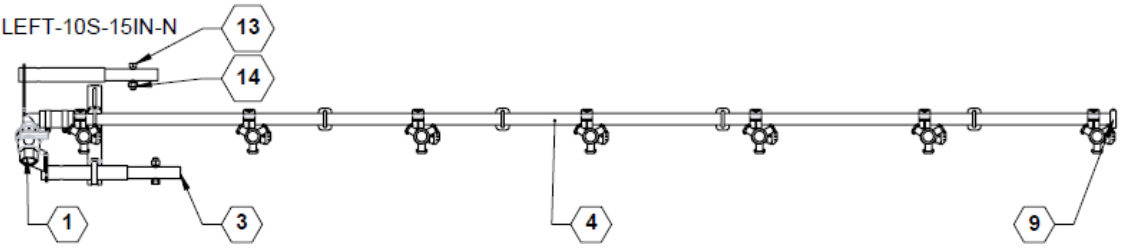

LEFT-10S-20IN-C

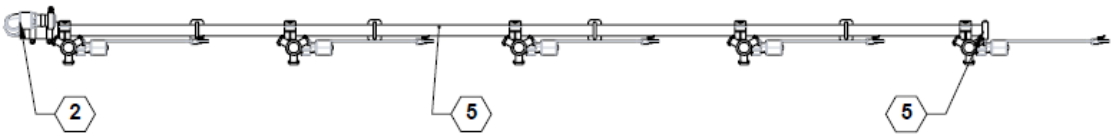

LEFT-10S-20IN-N

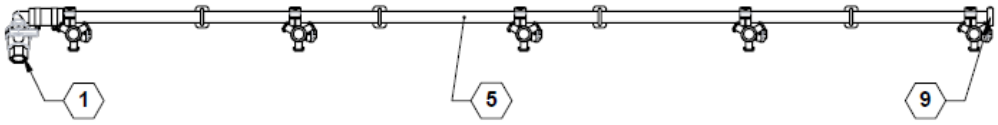

C	**Recirculating / Capstan**
N	**Uni-Directional / Non-Flowback**

Parts List, Wing 4: Wet Boom Plumbing – Wing 4 – 10 Section, 120’

C	Recirculating / Capstan
N	Uni-Directional / Non-Flowback

#	PART	10S-15IN-C	10S-15IN-N	10S-20IN-C	10S-20IN-N	DESCRIPTION
1	90SABC	-	1	-	1	ASSY, BOOM CLEAN OUT
2	90SAU	1	-	1	-	SUB ASSY U-FITTING
3	14295	1	1	-	-	EXTENSION, 15" FAST
4	14307	1	1	-	-	TUBE, 7 PORT 15" WB
5	14315	-	-	1	1	TUBE, 5 PORT 20" WB
6	16271	1	1	-	-	BRACKET, WET BOOM
7	510016	0.3	0.3	0.3	0.3	(FT) HOSE, 1IN EPDM
8	520084	7	7	5	5	NOZZLE BODY, TRIPLE 25mm
9	540014	4	3	4	3	HOSE CLAMP, SS 1.00 #16
10	540016	1	1	-	-	CLAMP, SS 1.500 #24
11	540029	5	5	4	4	CLAMP BODY, 1.00" TUBE, POLY GREEN
12	590048	5	5	4	4	U-BOLT, 1/4 X 1"
13	596142M	2	2	-	-	BOLT, HH 7/16 X 2 GR5 MAGNI
14	596238M	2	2	-	-	NUT, CENTERLOCK 7/16-14 MAGNI
15	596767M	10	10	8	8	NUT, HEX FLANGE 1/4-20 MAGNI

Wet Boom Plumbing – Wing 1 – 132’

See also: Wet Boom Plumbing – Center – Common Items, 120’ / 132’

LEFT-06S-22IN-C

LEFT-06S-22IN-N

LEFT-10S-22IN-C

LEFT-10S-22IN-N

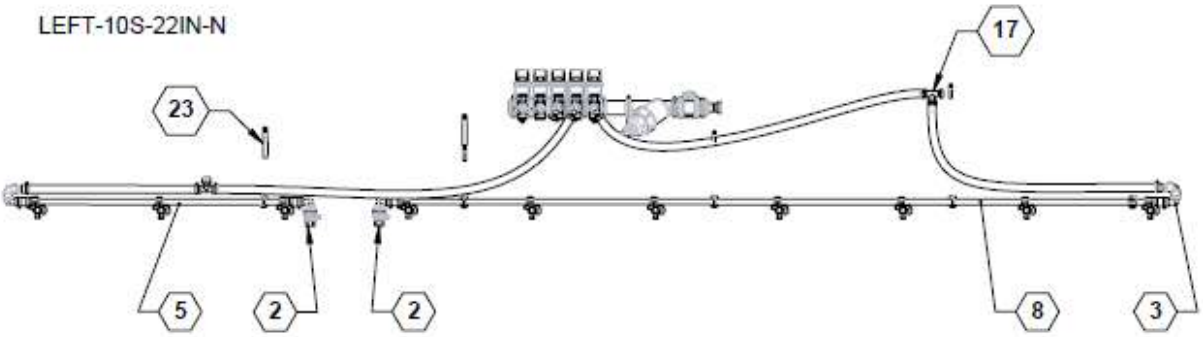

Parts List, Wing 1: Wet Boom Plumbing – Wing 1 – 132’

C	Recirculating / Capstan
N	Uni-Directional / Non-Flowback

NO.	PART	06S-22IN-C	06S-22IN-N	10S-22IN-C	10S-22IN-N	DESCRIPTION
2	90SABC	-	1	-	2	ASSY, BOOM CLEAN OUT
3	90SAU	2	1	2	2	SUB ASSY U-FITTING
4	90SAVUF	-	-	1	-	SUB ASSY, VALVE, U FERT.
5	14323	1	1	1	1	WET TUBE, 3 PORT 22"
8	14327	1	1	1	1	WET TUBE, 7 PORT 22"
9	16271	-	1	-	-	BRACKET, WET BOOM
10	36203	5	5	5	5	PLATE, TUBE CLAMP SPACER 10-GA
11	36204	-	-	-	1	ASSEMBLY, BOOM DISTRIBUTION, 10 SECTION, UNI-DIR
1	36205	-	-	1	-	ASSEMBLY, BOOM DISTRIBUTION, 10 SECTION, RECIRC
12	36328	-	1	-	-	ASSEMBLY, BOOM DISTRIBUTION, 6 SECTION, UNI-DIR
14	36327	1	-	-	-	ASSEMBLY, BOOM DISTRIBUTION, 6 SECTION, RECIRC
15	510016	12.7	7.6	8.6	23.6	(FT) HOSE, 1IN EPDM
16	520084	10	10	10	10	NOZZLE BODY, TRIPLE 25mm
17	530056	1	1	-	2	FITTING, TEE, 1.00 HB, POLY
18	540014	11	10	11	16	HOSE CLAMP, SS 1.00 #16
19	540019	-	1	-	-	CLAMP, HOSE 3" SS #48
20	540029	7	8	7	6	CLAMP BODY, 1.00" TUBE, POLY GREEN
21	540048	-	1	-	3	CLAMP, LOOP, 1.50, .50 WIDE, W/ .281 HOLE, VINYL COATED
23	540053	2	2	2	2	P-CLAMP, 4" W/3/8" HOLE
24	590048	5	6	5	4	U-BOLT, 1/4 X 1"
25	596101M	2	3	2	5	BOLT, HH 1/4-20 X 3/4 GR5 MAGNI
26	596105M	2	2	2	2	BOLT, HH 1/4-20X2-1/2 GR5 MAGNI
27	596235M	2	3	2	5	NUT, CENTERLOCK, 1/4-20 MAGNI
28	596256M	6	6	6	6	WASHER, FLAT 1/4 USS MAGNI
29	596767M	12	14	12	10	NUT, HEX FLANGE 1/4-20 MAGNI

Wet Boom Plumbing – Wing 2 –132’

See also: Wet Boom Plumbing – Wing 1 – Common Items, 120’ / 132’

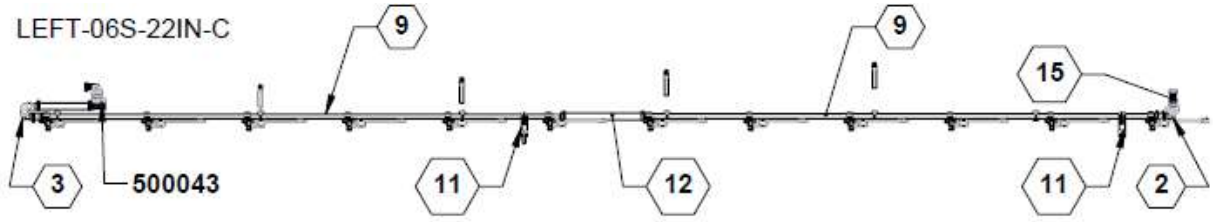

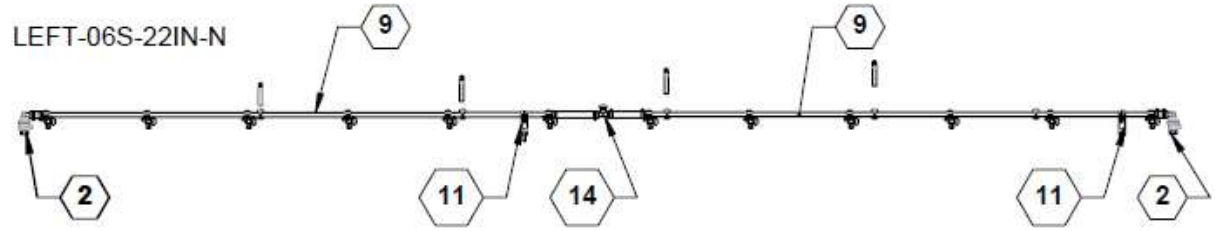

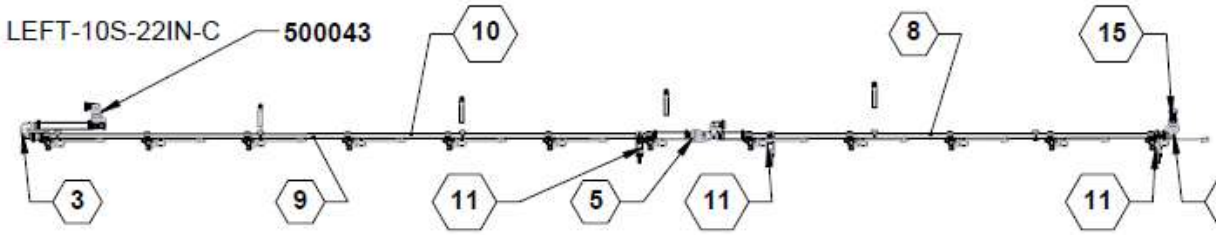

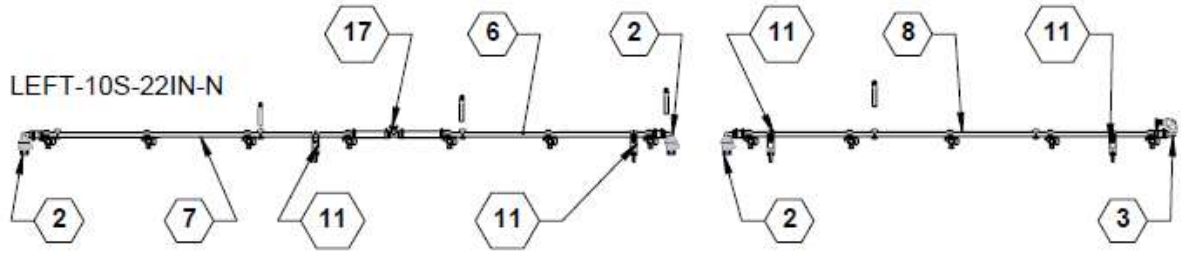

Parts List, Wing 2: Wet Boom Plumbing – Wing 2 –132’

C	Recirculating / Capstan
N	Uni-Directional / Non-Flowback

#	PART	06S-22IN-C	06S-22IN-N	10S-22IN-C	10S-22IN-N	DESCRIPTION
2	90SABC	1	2	1	3	ASSY, BOOM CLEAN OUT
3	90SAU	1	-	1	1	SUB ASSY U-FITTING
4	90SAVRJ	1	-	1	-	SUB ASSY, RECIRCULATION TEE
5	90SAVUF	-	-	1	-	SUB ASSY, VALVE, U FERT.
8	14325	-	-	1	1	WET TUBE, 5 PORT 22"
9	14326	2	2	-	-	WET TUBE, 6 PORT 22"
10	14327	-	-	1	-	WET TUBE, 7 PORT 22"
11	16271	2	2	3	4	BRACKET, WET BOOM
12	510016	3.6	3.6	4.5	5.4	(FT) HOSE, 1IN EPDM
13	520084	12	12	12	12	NOZZLE BODY, TRIPLE 25mm
14	530056	-	1	-	1	FITTING, TEE, 1.00 HB, POLY
15	530203	1	-	1	-	FITTING, .750 MNPT X 1.00 HB, POLY
16	540029	8	8	8	9	CLAMP BODY, 1.00" TUBE, POLY GREEN
17	540014	11	9	14	14	HOSE CLAMP, SS 1.00 #16
18	540018	2	2	3	4	CLAMP, 2-3/4" SS
19	540052	1	1	1	1	P-CLAMP, 3" WITH 3/8" HOLE
20	540053	3	3	3	3	P-CLAMP, 4" W/3/8" HOLE
21	590048	8	8	8	9	U-BOLT, 1/4 X 1"
22	596101M	4	4	4	4	BOLT, HH 1/4-20 X 3/4 GR5 MAGNI
23	596235M	3	3	3	3	NUT, CENTERLOCK, 1/4-20 MAGNI
24	596256M	7	7	7	7	WASHER, FLAT 1/4 USS MAGNI
25	596767M	16	16	16	18	NUT, HEX FLANGE 1/4-20 MAGNI

Wet Boom Plumbing – Wing 3 – 132’

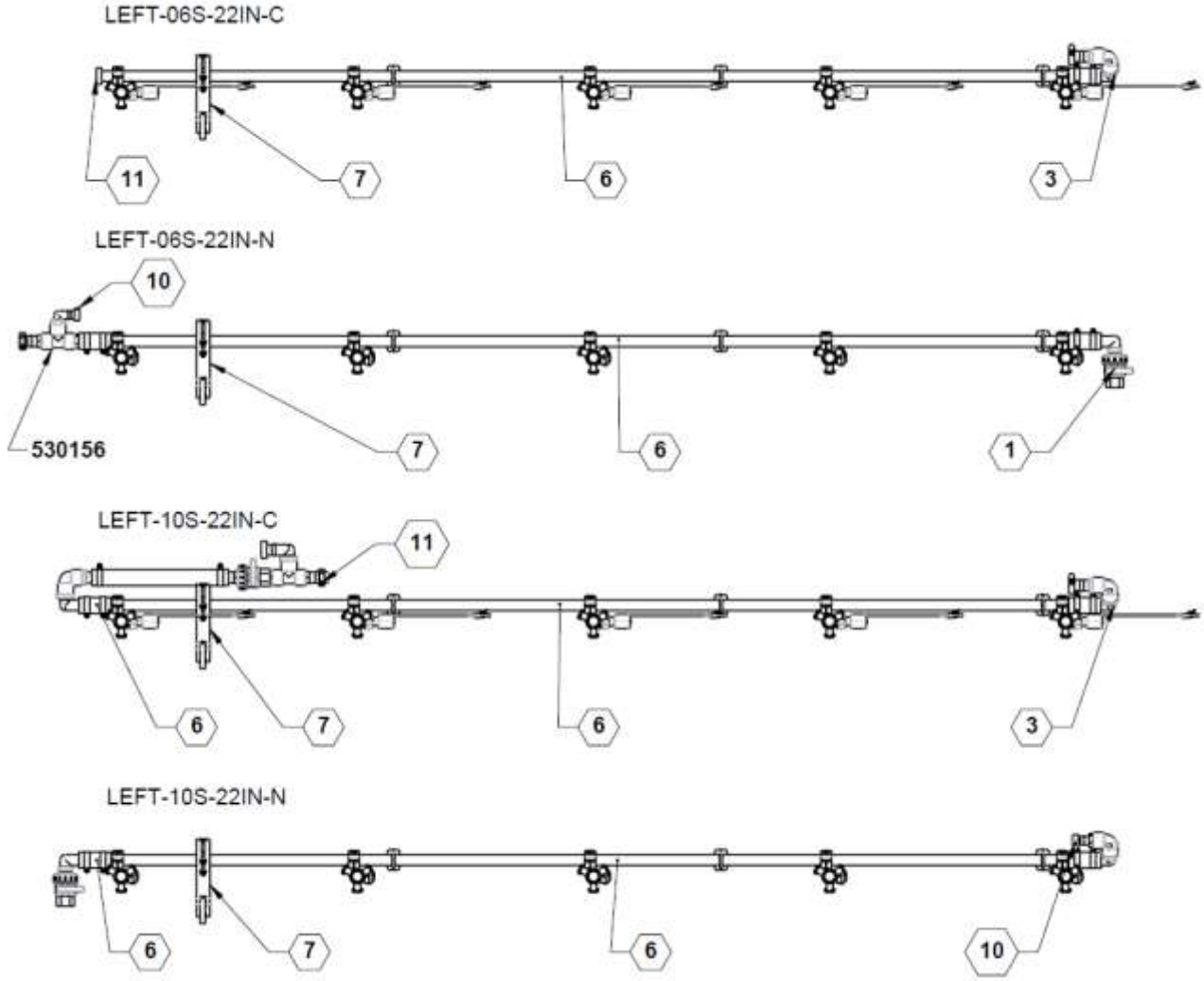

C	**Recirculating / Capstan**
N	**Uni-Directional / Non-Flowback**

Parts List, Wing 3: Wet Boom Plumbing – Wing 3 – 132’

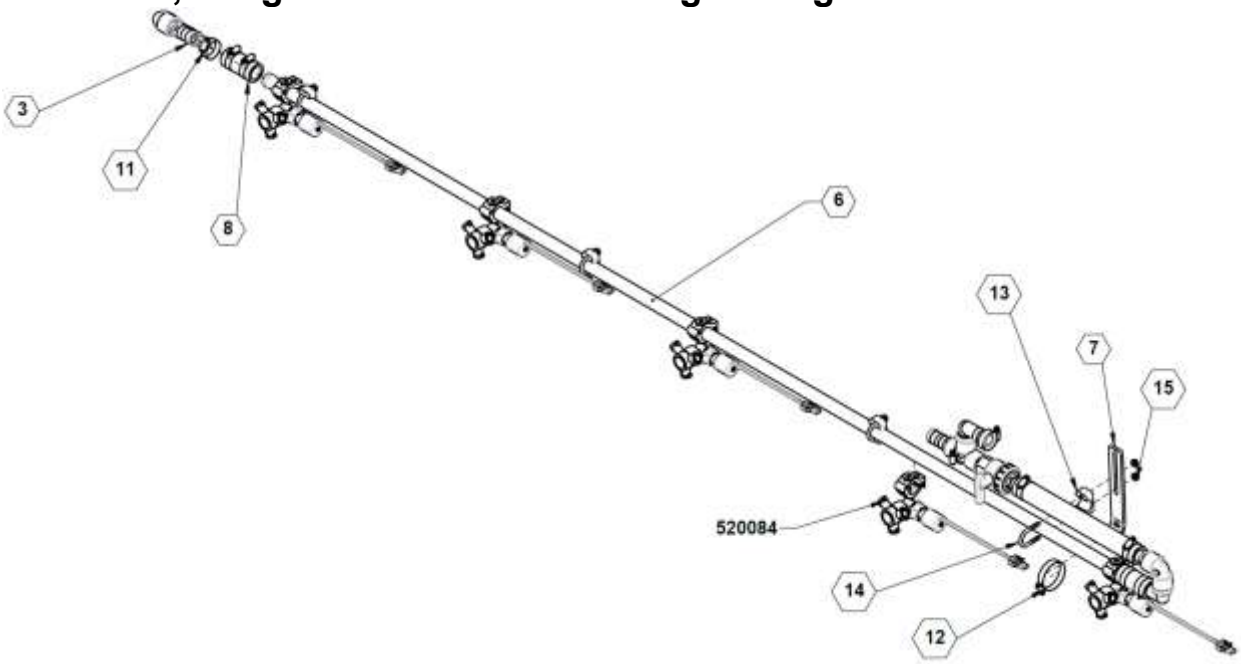

#	PART	06S-22IN-C	06S-22IN-N	10S-22IN-C	10S-22IN-N	DESCRIPTION
1	90SABC	-	1	-	1	ASSY, BOOM CLEAN OUT
2	90SAFTG100T07590	-	1	-	-	SUB-ASSY, LT; FTTNGS-L,T,2HB
3	90SAU	1	-	2	-	SUB ASSY U-FITTING
4	90SAU075	-	-	-	1	SUB ASSY U-FITTING
5	90SAVUF	-	-	1	-	SUB ASSY, VALVE, U FERT.
6	**14325**	1	1	1	1	WET TUBE, 5 PORT 22"
7	**16271**	1	1	1	1	BRACKET, WET BOOM
8	**510016**	0.9	1.8	2.7	1.8	(FT) HOSE, 1IN EPDM
9	**520084**	5	5	5	5	NOZZLE BODY, TRIPLE 25mm
10	**540013**	-	1	-	1	HOSE CLAMP, SS .75 #12
11	**540014**	4	5	9	4	HOSE CLAMP, SS 1.00 #16
12	**540017**	1	1	1	1	CLAMP, HOSE, 2.00 #32, SS
13	**540029**	4	4	4	4	CLAMP BODY, 1.00" TUBE, POLY GREEN
14	**590048**	4	4	4	4	U-BOLT, 1/4 X 1"
15	**596767M**	8	8	8	8	NUT, HEX FLANGE 1/4-20 MAGNI

Wet Boom Plumbing – Wing 4 – 132’

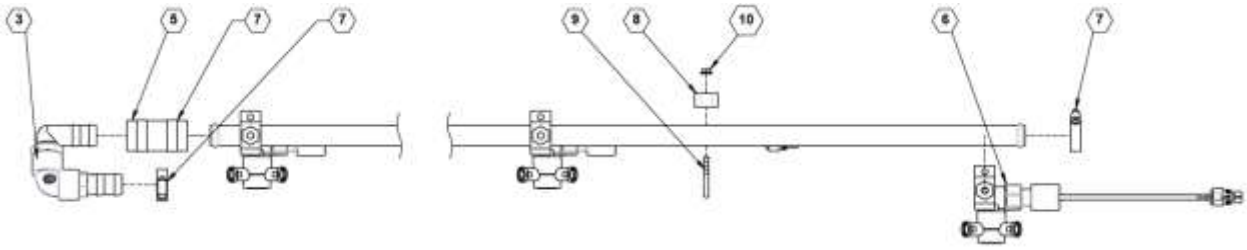

LEFT-06S-22IN-C

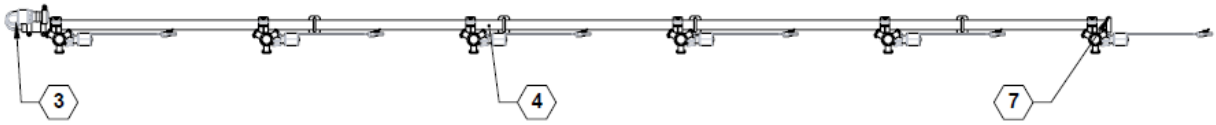

LEFT-06S-22IN-N

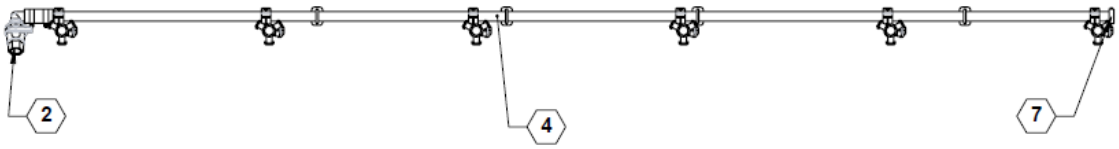

LEFT-10S-22IN-C

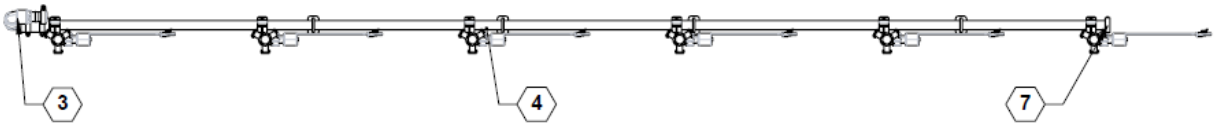

LEFT-10S-22IN-N

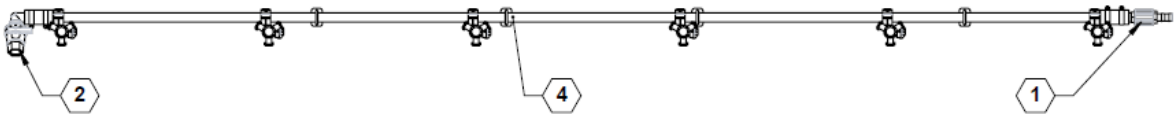

C	**Recirculating / Capstan**
N	**Uni-Directional / Non-Flowback**

Parts List, Wing 4: Wet Boom Plumbing – Wing 4 – 132’

C	Recirculating / Capstan
N	Uni-Directional / Non-Flowback

#	PART	06S-22IN-C	06S-22IN-N	10S-22IN-C	10S-22IN-N	DESCRIPTION
1	90SA075100HBST	-	-	-	1	SUBASSEMBLY, 3/4" TO 1 "HOSE BARB STRAIGHT
2	90SABC	-	1	-	1	ASSY, BOOM CLEAN OUT
3	90SAU	1	-	1	-	SUB ASSY U-FITTING
4	14326	1	1	1	1	WET TUBE, 6 PORT 22"
5	510016	0.9	0.9	0.9	1.8	(FT) HOSE, 1IN EPDM
6	520084	6	6	6	6	NOZZLE BODY, TRIPLE 25mm
7	540014	4	3	4	4	HOSE CLAMP, SS 1.00 #16
8	540029	4	4	4	4	CLAMP BODY, 1.00" TUBE, POLY GREEN
9	590048	4	4	4	4	U-BOLT, 1/4 X 1"
10	596767M	8	8	8	8	NUT, HEX FLANGE 1/4-20 MAGNI

Boom Section Distribution – 06 Section TeeJet

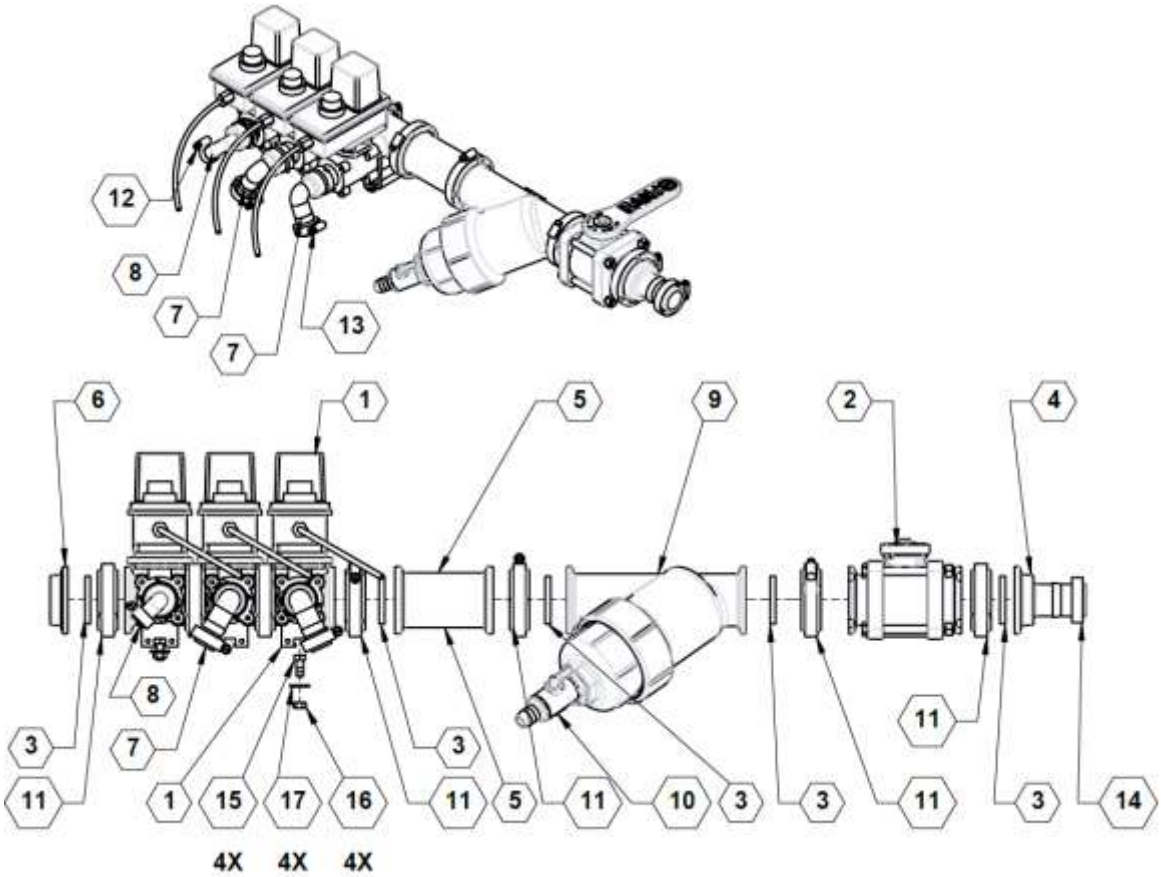

Parts List 36327-A / 36328-A: Boom Section Distribution – 06 Section TeeJet

ITEM	PART NO.	QTY.	DESCRIPTION
1	**500027**	0.75	VALVE, 450 4-BANK, NON-FLOWBACK, NARROW TEE
2	**500039**	1	VALVE, MANIFOLD, 2.00 STD. PORT, 4 BOLT, POLY
3	**530014**	5	GASKET, 1.500 EPDM
4	**530079**	1	MANIFOLD FLANGE, 2" X 1-1/2" HB
5	**530084**	1	FLANGE, STD PORT 2" X 2"
6	**530093**	1	PLUG, MANIFOLD, 2.00
7	**530190**	2	QUICK CONNECT, 1.00 HB ELBOW 90
8	**530358**	1	(UNI-DIR) QUICK CONNECT, 3/4" HB, 90°
	530190		(RECIRC) QUICK CONNECT, 1.00 HB ELBOW 90
9	**530473**	1	Y STRAINER, 2" MANIFOLD, 80 MESH
10	**530517**	1	MICRO VALVE, 3/4" HB X 1" MPT
11	**540001**	5	CLAMP, 2.00 STD WORM SCREW
12	**540013**	1	HOSE CLAMP, SS .75 #12
13	**540014**	2	HOSE CLAMP, SS 1.00 #16
14	**540016**	1	CLAMP, SS 1.500 #24
15	**596114M**	4	BOLT, HH 5/16-18X3/4 GR5 MAGNI
16	**596236M**	4	NUT, CENTERLOCK, 5/16-18 MAGNI
17	**596257M**	4	WASHER, FLAT 5/16 USS MAGNI

Boom Section Distribution – 10 Section TeeJet

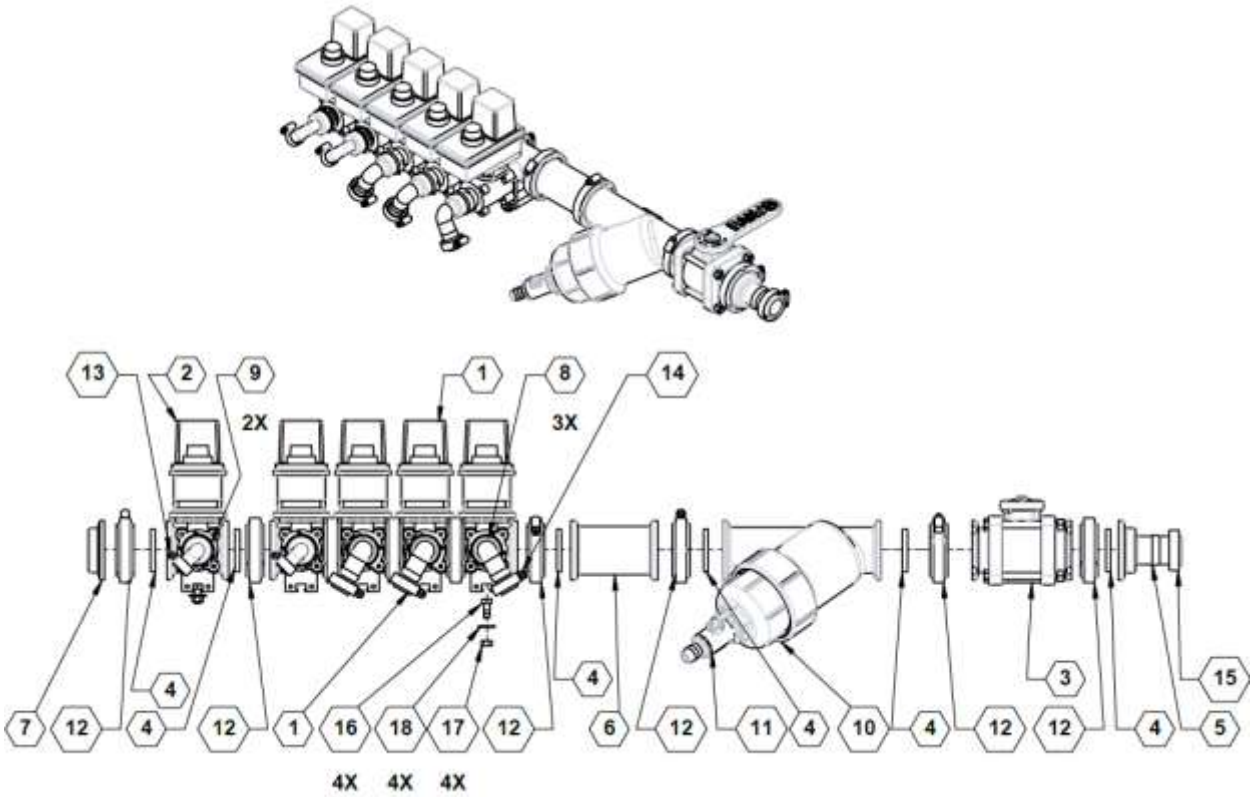

Parts List 36204-A / 36205-A: Boom Section Distribution – 10 Section TeeJet

ITEM	PART NO.	QTY.	DESCRIPTION
1	**500027**	1	VALVE, 450 4-BANK, NON-FLOWBACK, NARROW TEE
2	**500027**	0.25	VALVE, 450 4-BANK, NON-FLOWBACK, NARROW TEE
3	**500039**	1	VALVE, MANIFOLD, 2.00 STD. PORT, 4 BOLT, POLY
4	**530014**	6	GASKET, 1.500 EPDM
5	**530079**	1	MANIFOLD FLANGE, 2" X 1-1/2" HB
6	**530084**	1	FLANGE, STD PORT 2" X 2"
7	**530093**	1	PLUG, MANIFOLD, 2.00
8	**530190**	3	QUICK CONNECT, 1.00 HB ELBOW 90
9	**530358**	2	(UNI-DIR) QUICK CONNECT, 3/4" HB, 90°
	530190		(RECIRC) QUICK CONNECT, 1.00 HB ELBOW 90
10	**530473**	1	Y STRAINER, 2" MANIFOLD, 80 MESH
11	**530517**	1	MICRO VALVE, 3/4" HB X 1" MPT
12	**540001**	6	CLAMP, 2.00 STD WORM SCREW
13	**540013**	2	HOSE CLAMP, SS .75 #12
14	**540014**	3	HOSE CLAMP, SS 1.00 #16
15	**540016**	1	CLAMP, SS 1.500 #24
16	**596114M**	4	BOLT, HH 5/16-18X3/4 GR5 MAGNI
17	**596236M**	4	NUT, CENTERLOCK, 5/16-18 MAGNI
18	**596257M**	4	WASHER, FLAT 5/16 USS MAGNI

Boom Section Distribution – 06-10 Section KZ-Co

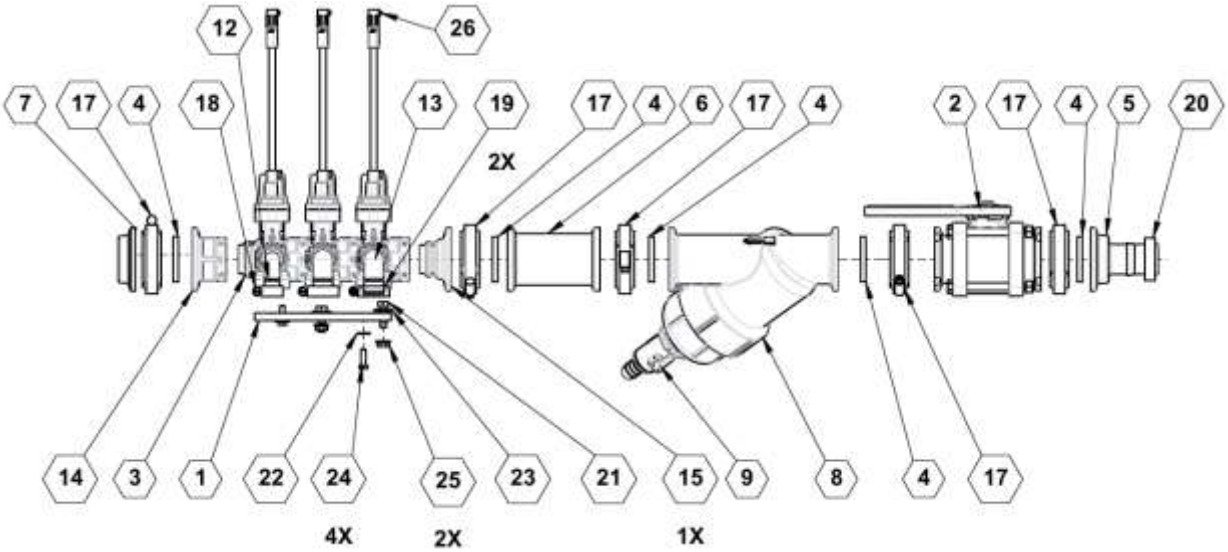

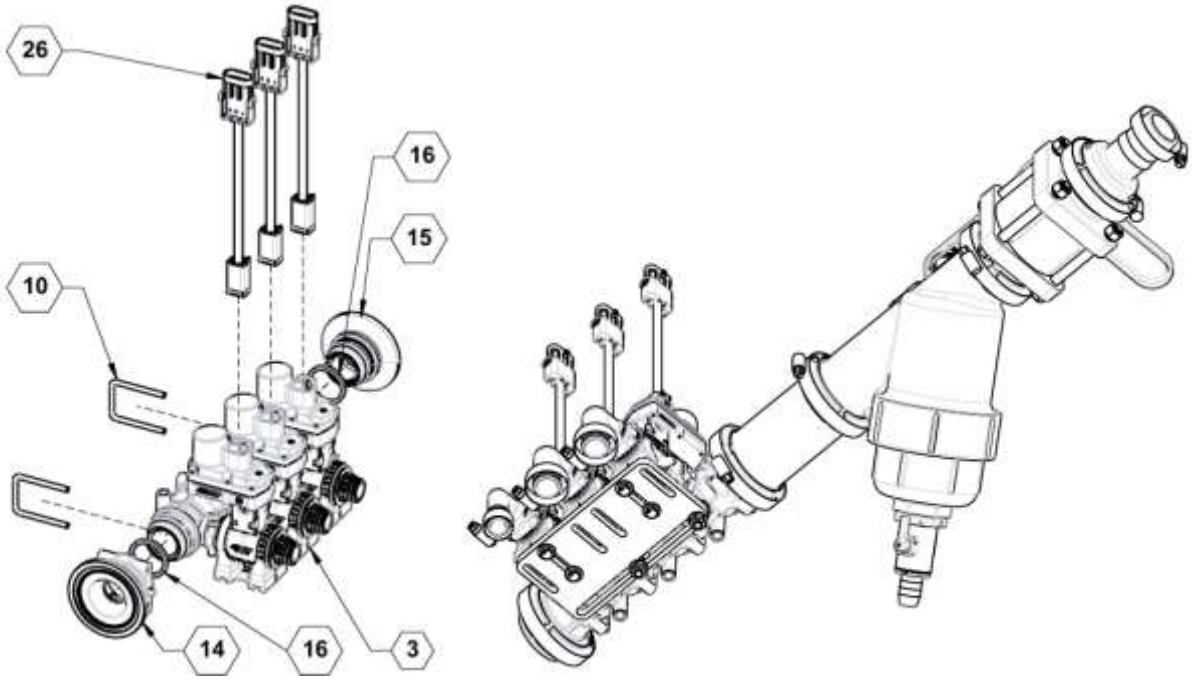

Parts List 36204 / 36205 / 36327 / 36328: Boom Section Distribution – 06-10 Section KZ-Co

ITEM	PART NO.	QTY.	DESCRIPTION
1	**37967**	1	PLATE, ADAPTER, 3 SECTION EH6 VALVE
2	**500039**	1	VALVE, MANIFOLD, 2.00 STD. PORT, 4 BOLT, POLY
3	**500085**	0.75	SECTION VALVE BANK, 3X
		1.25	SECTION VALVE BANK, 5X
4	**530014**	5	GASKET, 1.500 EPDM
5	**530079**	1	MANIFOLD FLANGE, 2" X 1-1/2" HB
6	**530084**	1	FLANGE, STD PORT 2" X 2"
7	**530093**	1	PLUG, MANIFOLD, 2.00
8	**530473**	1	Y STRAINER, 2" MANIFOLD, 80 MESH
9	**530517**	1	MICRO VALVE, 3/4" HB X 1" MPT
10	**530580**	2	3/16" HAIRPIN RETAINER, KZ QF FITTINGS
11	**530581**	3 / 5	1/8" HAIRPIN RETAINER, KZ QD FITTINGS
12	**530582**	1 / 2	FITTING, TX2 3/4" BARB 90
13	**530583**	2 / 3	FITTING, TX2 1" BARB 90
14	**530588**	1	FITTING, FEMALE QF X M200
15	**530591**	1	FITTING, MALE QF X M200
16	**530592**	2	GASKET, QF EPDM
17	**540001**	5	CLAMP, 2.00 STD WORM SCREW
18	**540013**	1 / 2	HOSE CLAMP, SS .75 #12
19	**540014**	2 / 3	HOSE CLAMP, SS 1.00 #16
20	**540016**	1	CLAMP, SS 1.500 #24
21	**596115M**	2	BOLT, HH 5/16-18 X 1 GR5 MAGNI
22	**596256M**	4	WASHER, FLAT 1/4 USS MAGNI
23	**596257M**	2	WASHER, FLAT 5/16 USS MAGNI
24	**596492M**	4	BOLT, HH, M6 X 20MM, 8.8, MAGNI
25	**596768M**	2	NUT, HEX FLANGE 5/16-18 MAGNI
26	**632317**	3 / 5	ADAPTER HARNESS, DT06-4 X 3 PIN FEMALE WEATHERPACK

Filter / Strainer at Boom

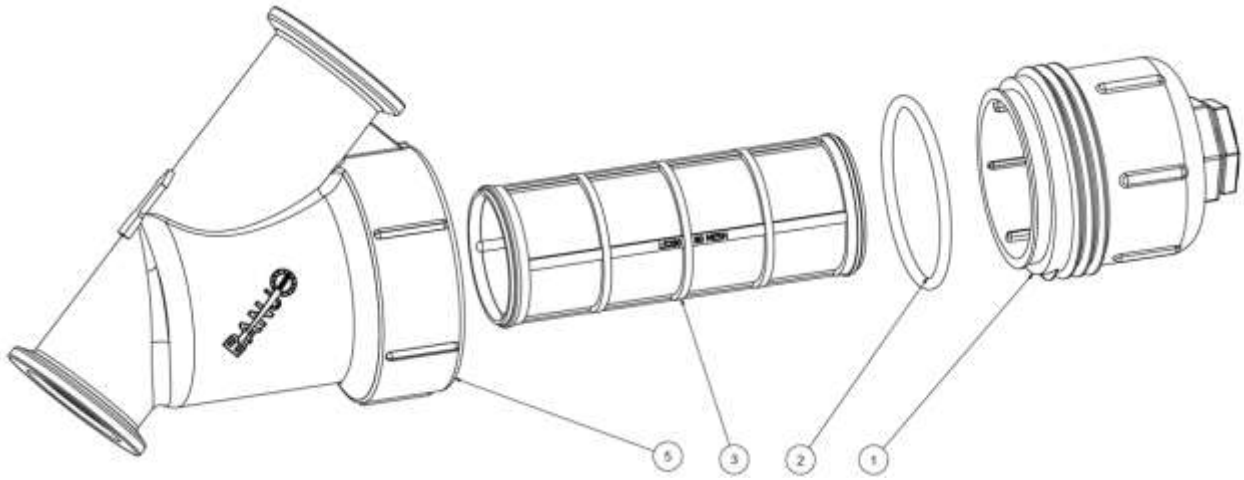

Parts List 530473: Filter / Strainer at Boom

ITEM	QTY	PART NUMBER	DESCRIPTION
1	1	LS150-C	LS CAP ASSY
2	1	LS150-G	#339 O-RING
3	1	LS280	2" LS SCREEN - 80 MESH
4	1	LST225D	DECAL (N/S)
5	1	MLS200B	2" LINE STRAINER BODY

See https://www.banjocorp.com/banjo/Manifold-Flange-Connections/MLS200-80/p/2821208

Hose Barb Reducer, 1” to 3/4” ID

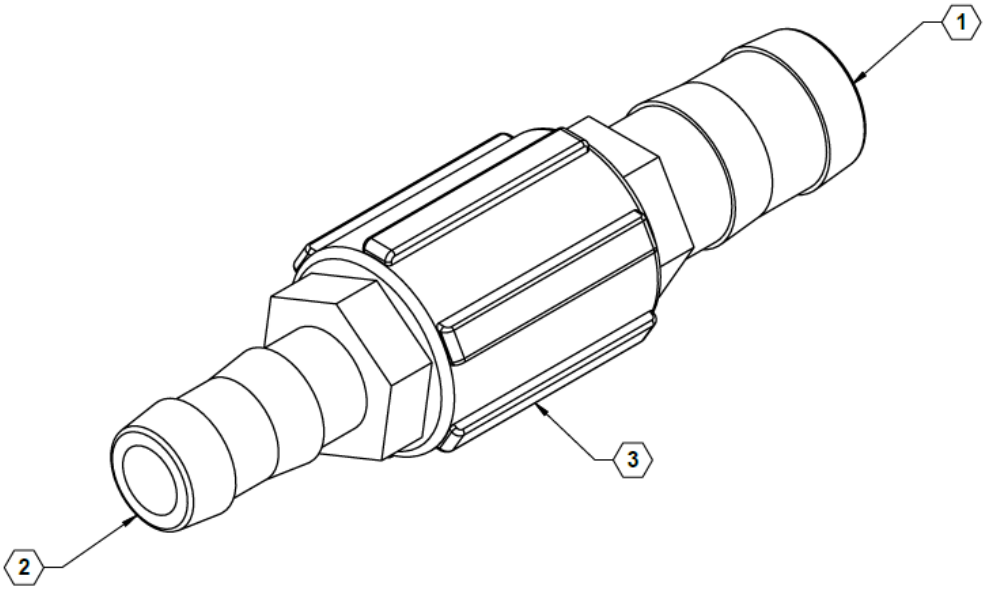

Parts List 90SA075100HBST: Hose Barb Reducer, 1” to 3/4” ID

ITEM	PART NO.	QTY.	DESCRIPTION
1	**530203**	1	FITTING, .750 MNPT X 1.00 HB, POLY
2	**530230**	1	FITTING, .75 MPT X .75 HB
3	**530235**	1	COUPLER, 3/4" POLY PIPE

Hose Barb U-Fitting

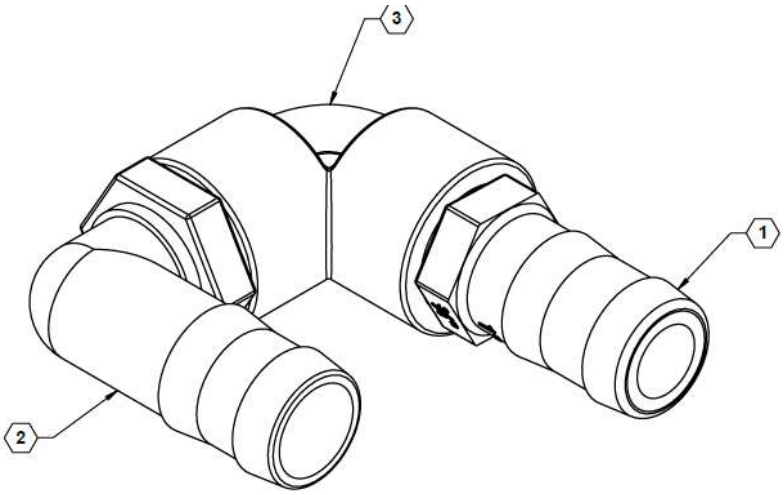

Parts List 90SAU / 90SAU075: Hose Barb U-Fitting

ITEM	PART NO.	QTY.	DESCRIPTION
1	**530203**	1	FITTING, 3/4" MPT X 1" HOSE BARB
	530230		FITTING, 3/4” MPT X 3/4” HOSE BARB
2	**530238**	1	ELBOW, 3/4" NPT X 1" HB, POLY
3	**530239**	1	3/4" POLY PIPE ELBOW 90 DEG

Boom Clean Out

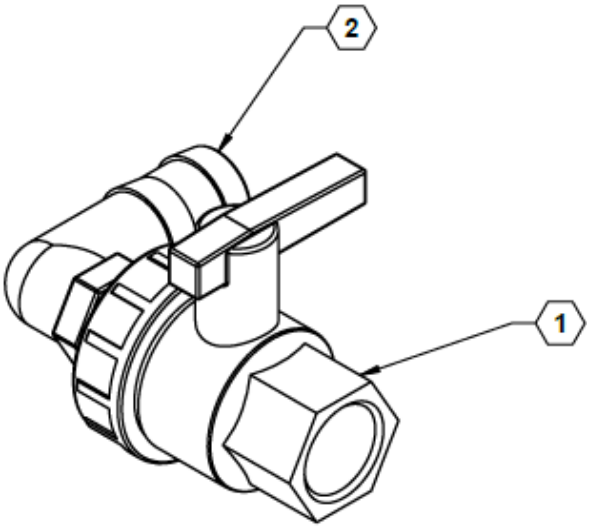

Parts List 90SABC: Boom Clean Out

ITEM	PART NO.	QTY.	DESCRIPTION
1	**500043**	1	VALVE, 3/4" UNION
2	**530036**	1	ELBOW, .75 MPT X 90°

Side Fold Fitting for 60’ Extension

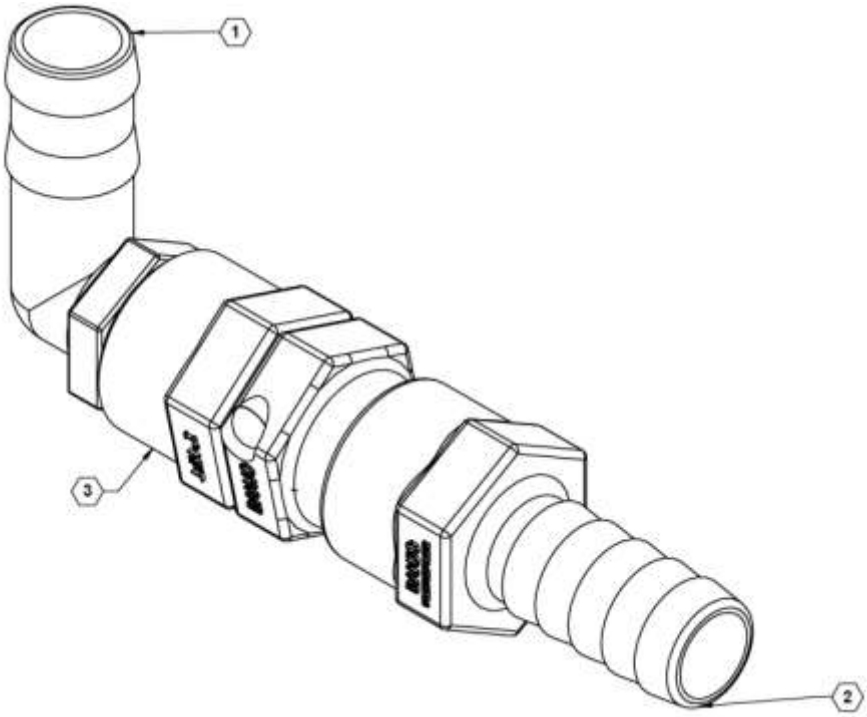

Parts List 90SA6080SF: Side Fold Fitting for 60’ Extension

ITEM	PART NO.	QTY.	DESCRIPTION
1	**530044**	1	FITTING, ELBOW, 90D, 1.00 MNPT X 1.00 HB, POLY
2	**530325**	1	FITTING, 1.00 FNPT X 1.00 HB, POLY
3	**530326**	1	SWIVEL MPT 1 X 1 FEM THRD

Valved Tee

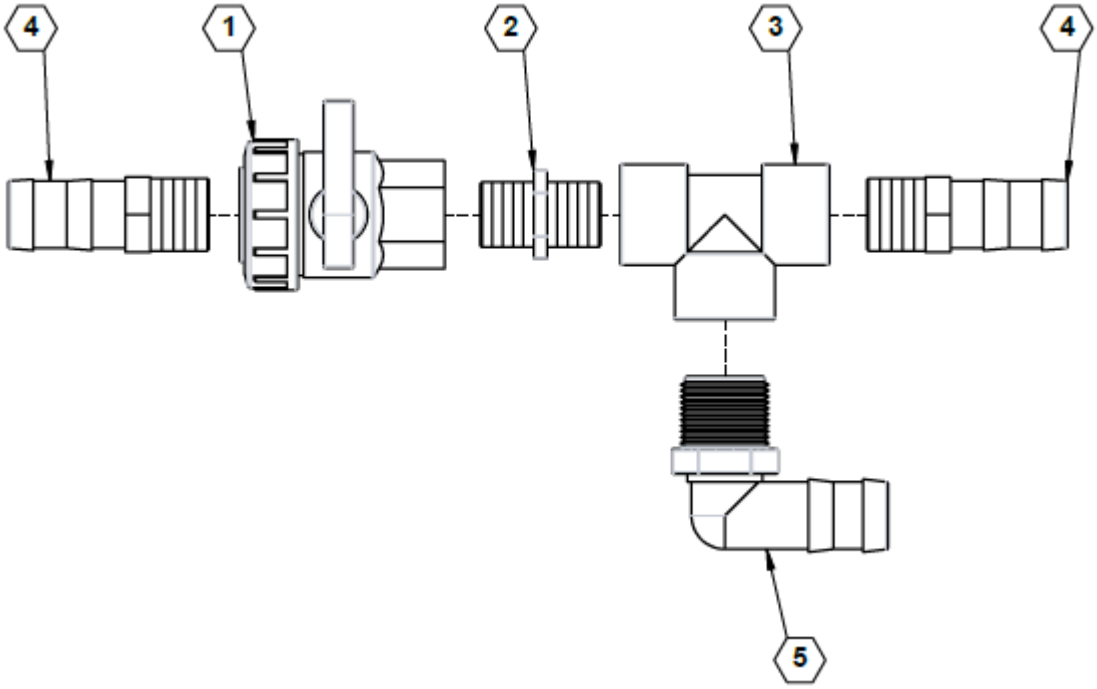

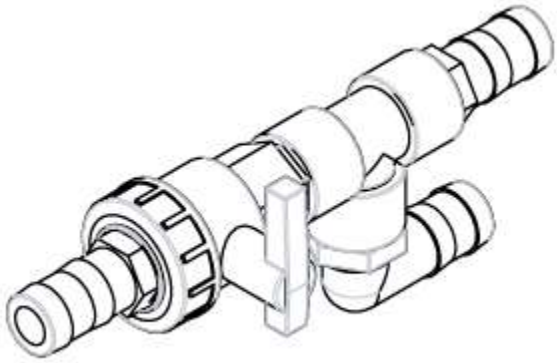

Parts List 90SAVUF: Valved Tee

ITEM	PART NO.	QTY.	DESCRIPTION
1	**500043**	1	VALVE, 3/4" UNION
2	**530131**	1	NIPPLE, POLY PIPE 3/4" SHORT
3	**530156**	1	TEE, 3/4" POLY PIPE
4	**530203**	2	FITTING, .750 MNPT X 1.00 HB, POLY
5	**530238**	1	1" 90° ELBOW

Note: Multiple orientations of this part exist.

Recirculation Tee, One Valve

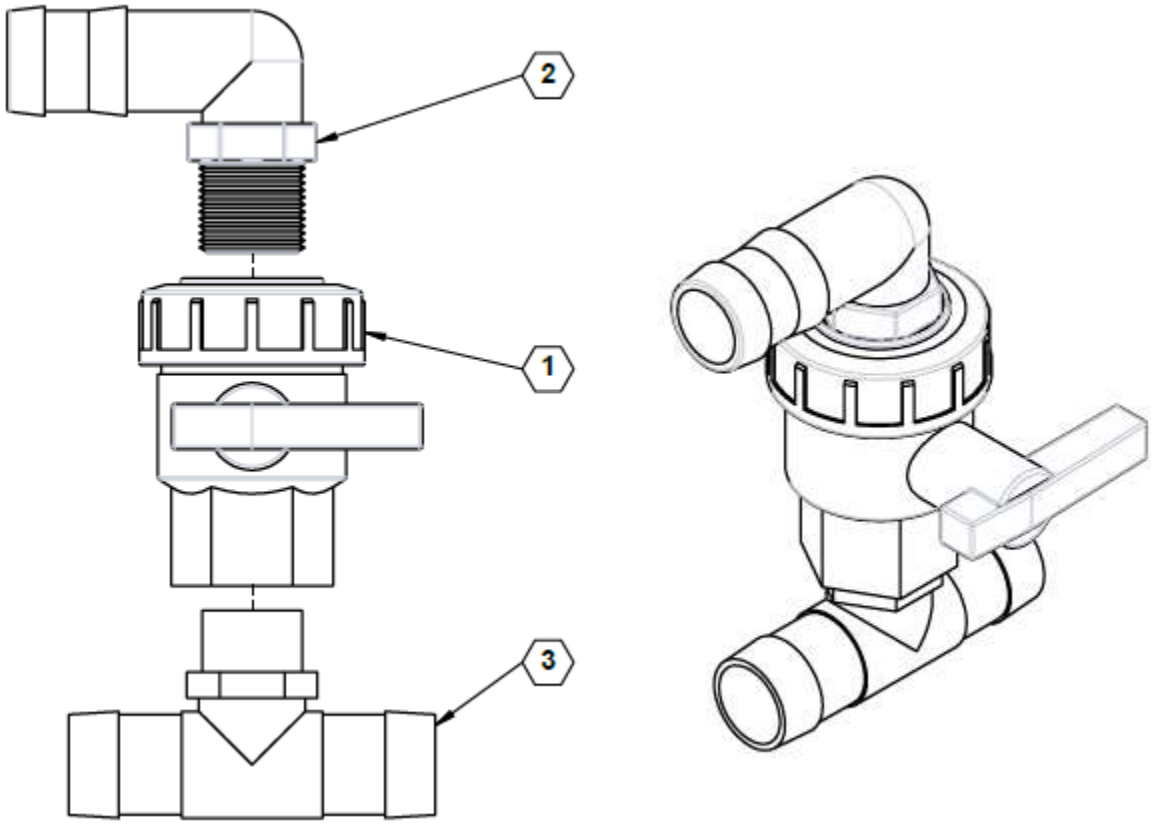

Parts List 90SAVRJ: Recirculation Tee, One Valve

ITEM	PART NO.	QTY.	DESCRIPTION
1	**500043**	1	VALVE, 3/4" UNION
2	**530036**	1	ELBOW, .75 MPT X 1.00 HB, 90~
3	**530181**	1	TEE, .75 MPT X 1.00 HB X 1.00 HB

Note: Multiple orientations of this part exist.

Recirculation Tee, Two Valve

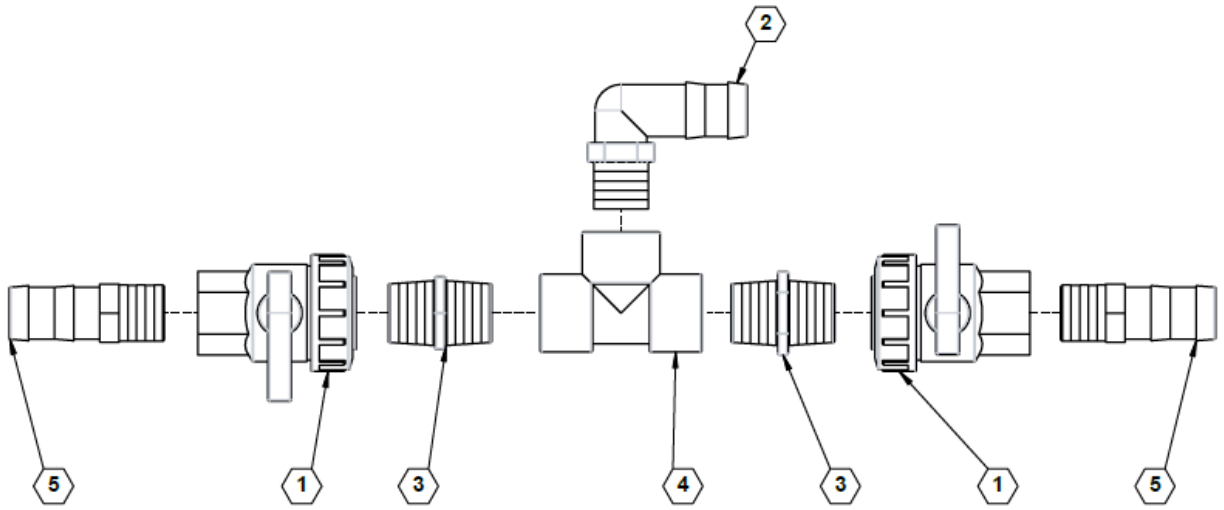

Parts List 90SAVRT2: Recirculation Tee, Two Valve

ITEM	PART NO.	QTY.	DESCRIPTION
1	**500043**	2	VALVE, 3/4" UNION
2	**530036**	1	ELBOW, .75 MPT X 1.00 HB, 90~
3	**530131**	2	NIPPLE, SHORT POLY X 3/4 IN
4	**530156**	1	TEE, 3/4" POLY PIPE
5	**530203**	2	FITTING, .750 MNPT X 1.00 HB, POLY

End of Hose Plug

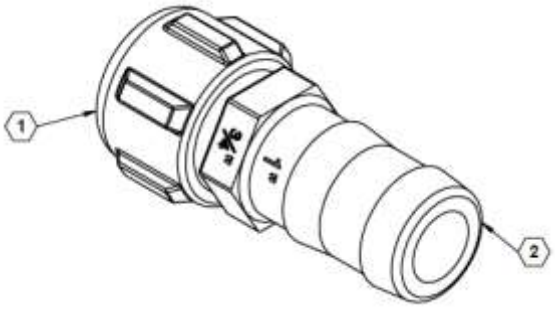

Parts List 90SAPLUG: End of Hose Plug

ITEM	PART NO.	QTY.	DESCRIPTION
1	**530245**	1	CAP, .750 FGT, BLACK POLY
2	**530275**	1	FITTING, 3/4" STRAIGHT THREAD X 1" HB
3	**530227**	1	WASHER, 1.00 OD X .750 ID, BLACK VINYL

Hose Barb Tee, 1” to 3/4”

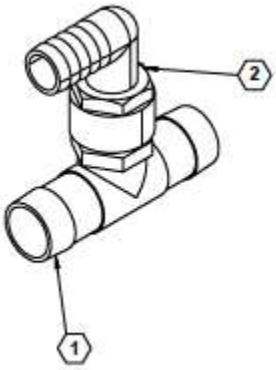

Parts List 90SAFTG100T07590: Hose Barb Tee, 1” to 3/4”

ITEM	PART NO.	QTY.	DESCRIPTION
1	**530181**	1	TEE, .75 MPT X 1.00 HB X 1.00 HB
2	**530213**	1	HOSE BARB ELBOW, 3/4” FPT X 3/4” BARB

Hose Barb H, 1” to 3/4”

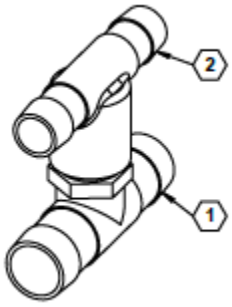

Parts List 90SAFTG100T075T: Hose Barb H, 1” to 3/4”

ITEM	PART NO.	QTY.	DESCRIPTION
1	**530181**	1	TEE, .75 MPT X 1.00 HB X 1.00 HB
2	**530220**	1	TEE, .75 MPT X .75 HB X .75 HB

Fenceline Nozzles – Manual

NOTE:
1. REMOVE CHECK VALVE CAP FROM NOZZLE BODY
2. FINISH: NONE

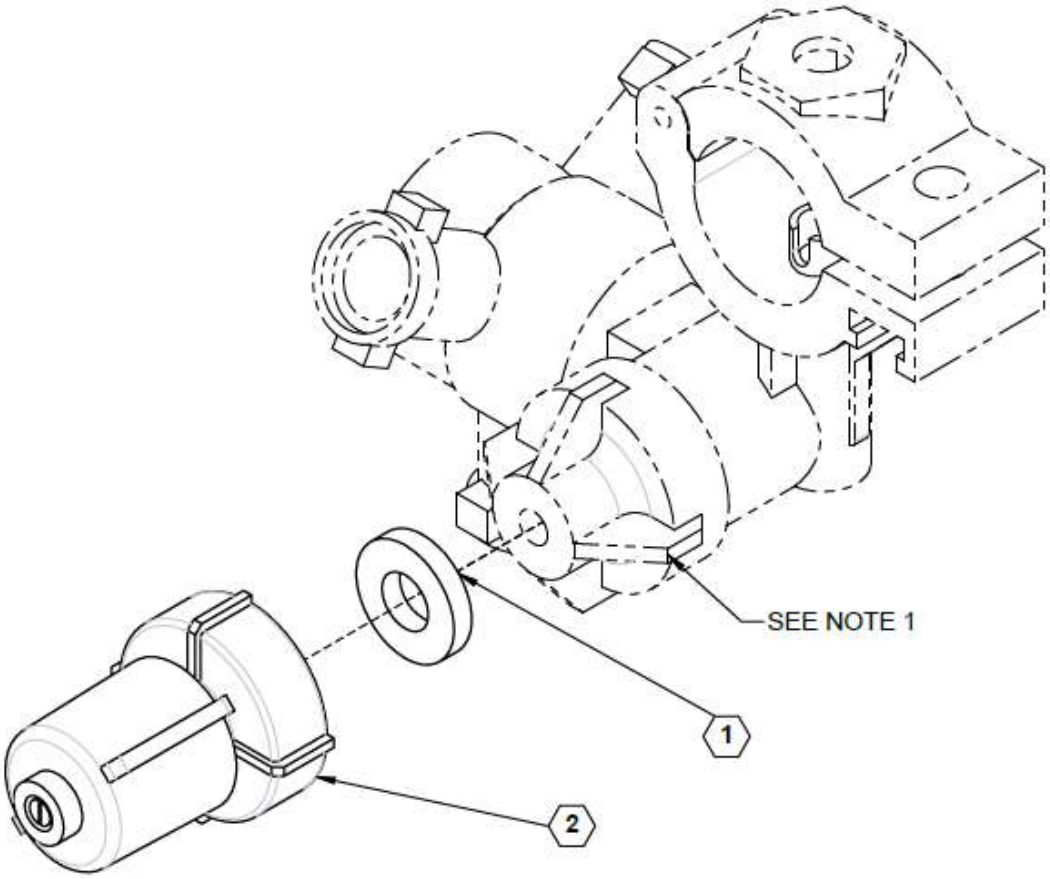

Parts List 99EPFLN00: Fenceline Nozzles – Manual

ITEM	PART NO.	QTY.	DESCRIPTION
1	**520016**	2	GASKET, QUICK TEEJET SEAT, STD EPDM
2	**520037**	2	VALVE, MANUAL SHUTOFF, FENCELINE

Fenceline Nozzles – Electric One Side

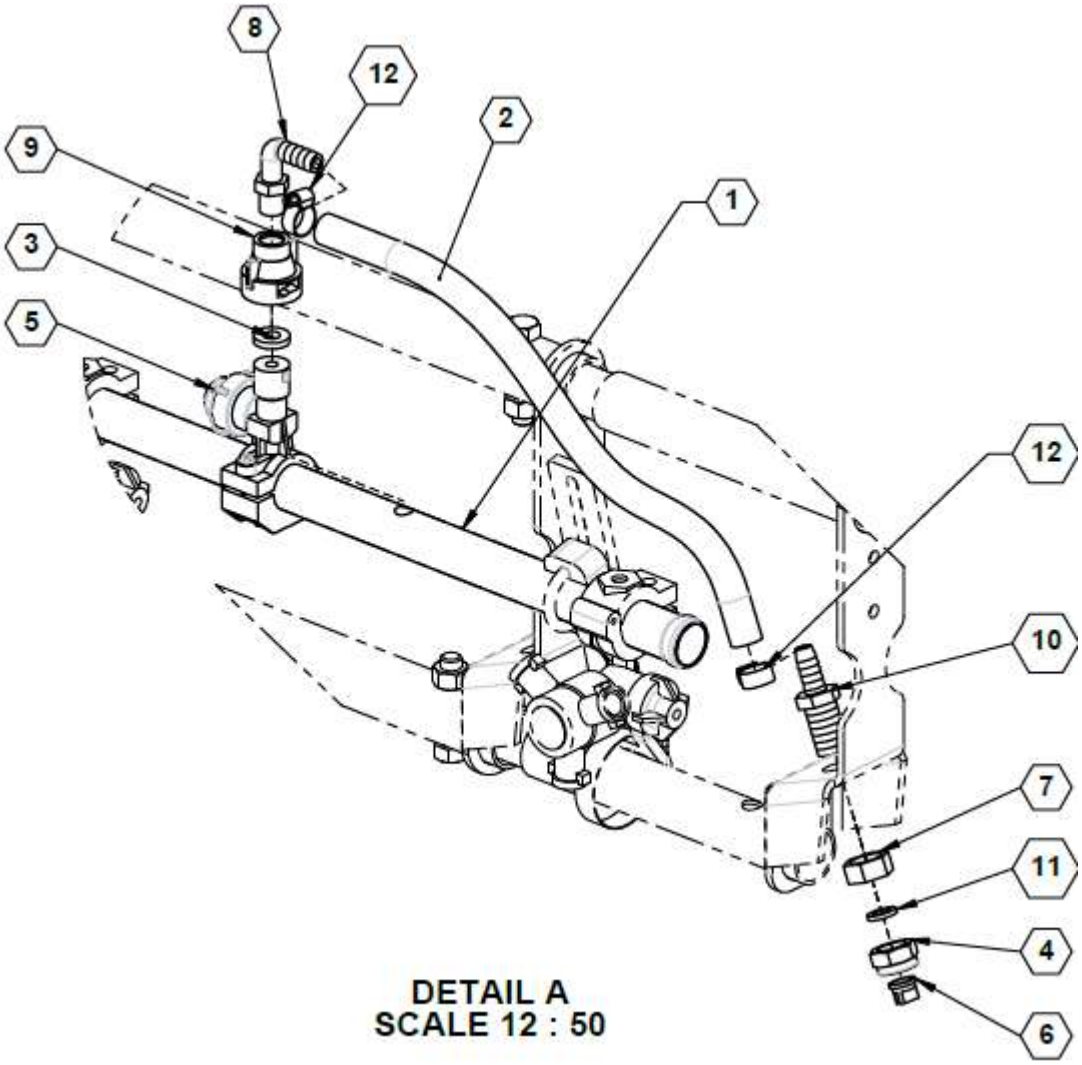

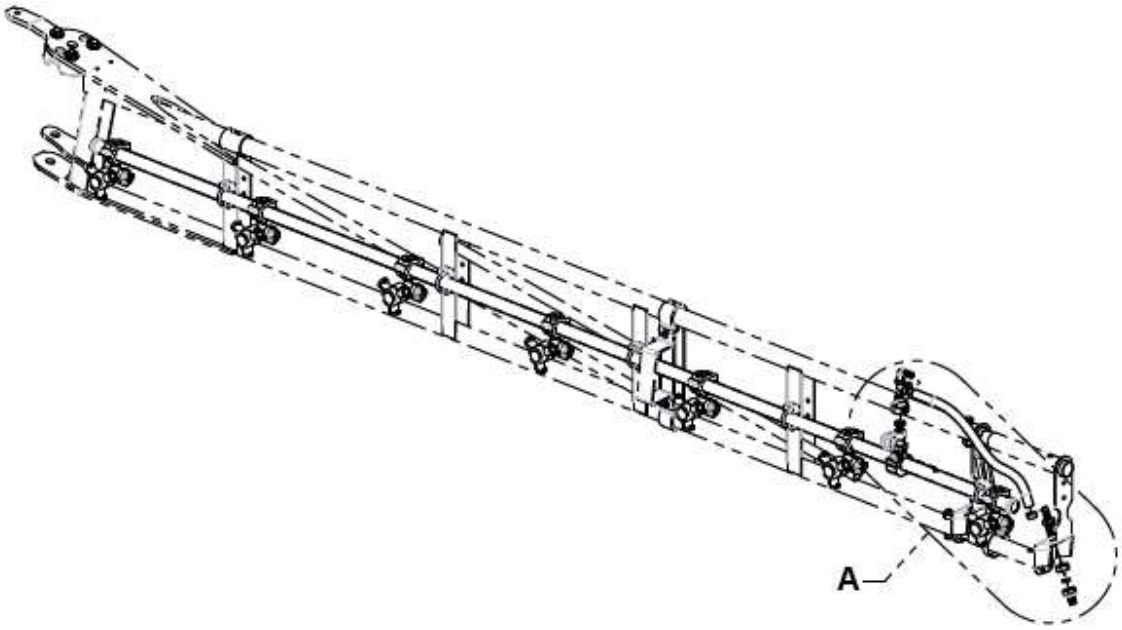

Parts List 36723 / 36724 / 36725: Fenceline Nozzles – Electric One Side

ITEM	PART NO.	QTY.	DESCRIPTION
1	**14311**	1	WET TUBE, 7 PORT 15" + VALVE
	14320		WET TUBE, 5 PORT 20" + VALVE
	14330		WET TUBE, 5 PORT 22” + VALVE
2	**510020**	1.1	(FT) HOSE, 0.375IN EPDM
3	**520016**	1	GASKET, QUICK TEEJET SEAT, STD EPDM
4	**520019**	1	CAP, NOZZLE, BLACK NYLON
5	**520030**	1	NOZZLE BODY, 25MM SINGLE
6	**520050**	1	TIP, NOZZLE, BLUE POLYMER, FLAT SPRAY
7	**530206**	1	NUT, NOZZLE 11/16"
8	**530209**	1	FITTING, ELBOW, 90D, .250 MNPT X .375 HB, POLY
9	**530248**	1	QUICKJET ADAPTER NY
10	**530306**	1	NOZZLE, POLY FENCELINE W/ HB
11	**530356**	1	GASKET, RUBBER QJT
12	**540032**	2	HOSE CLAMP, 5/16 #5 SS

See also:

- Fenceline Nozzles – Single, Display Control
- Fenceline Nozzles – Single, Toggle Switch Control
- Fenceline Nozzles – Dual, Display Control
- Fenceline Nozzles – Dual, Toggle Switch Control

Fenceline Nozzles – Electric Two Sides

Parts List 36726 / 36727 / 36728: Fenceline Nozzles – Electric Two Sides

ITEM	PART NO.	QTY.	DESCRIPTION
1	36723	2	OPTION, FENCELINE NOZZLE 15 IN
	36724		OPTION, FENCELINE NOZZLE 20 IN
	36725		OPTION, FENCELINE NOZZLE 22 IN

See also:

- Fenceline Nozzles – Single, Display Control
- Fenceline Nozzles – Single, Toggle Switch Control
- Fenceline Nozzles – Dual, Display Control
- Fenceline Nozzles – Dual, Toggle Switch Control

Recirculation Re-entry

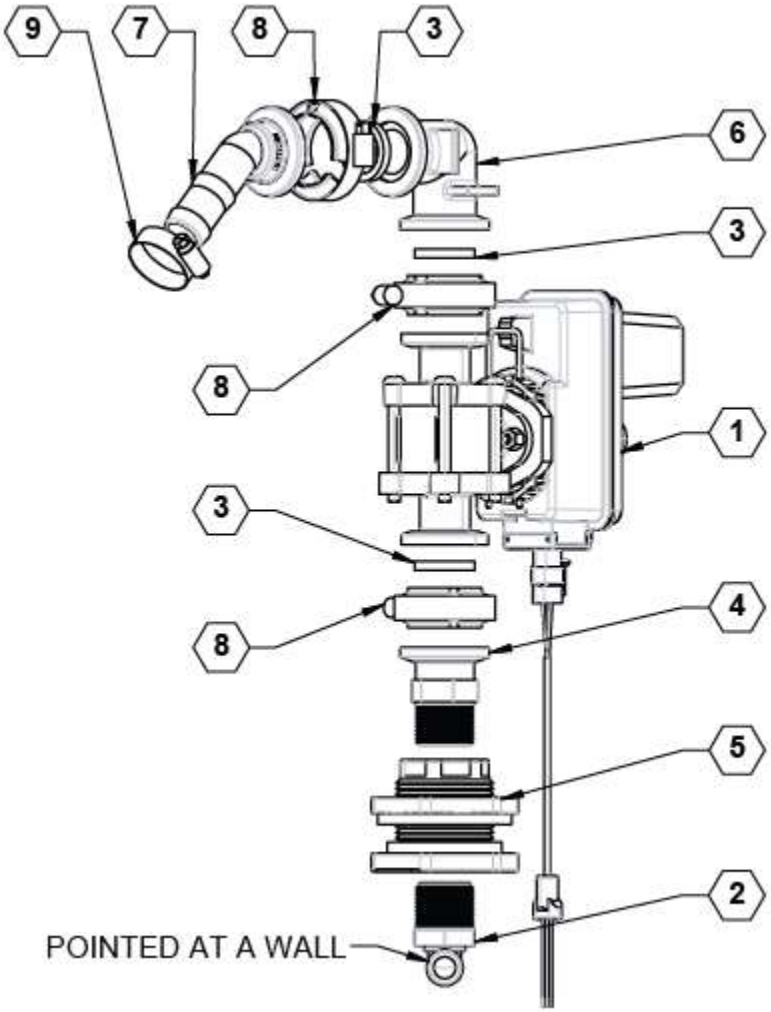

Parts List 36209: Recirculation Re-entry

ITEM	PART NO.	QTY.	DESCRIPTION
1	500084	1	VALVE, SHUTOFF 2-WAY, 344
2	530042	1	ELBOW, 90 DEG, 1.00 MPT X .75 HB, POLY
3	530068	3	GASKET, 1.00 EPDM
4	530069	1	FITTING, 1.00 MANIFOLD X 1.00 MPT
5	530161	1	FITTING, 1" FPT BULKHEAD
6	530362	1	FITTING, 1" MANIFOLD 90° ELBOW
7	530426	1	ELBOW 45, 1.00 FLANGE X 1.00 HB
8	540000	3	CLAMP, WORM SCREW, 1.00
9	540014	1	HOSE CLAMP, SS 1.00 #16

PRODUCT PLUMBING on FRAME

Plumbing Schematic (830018)

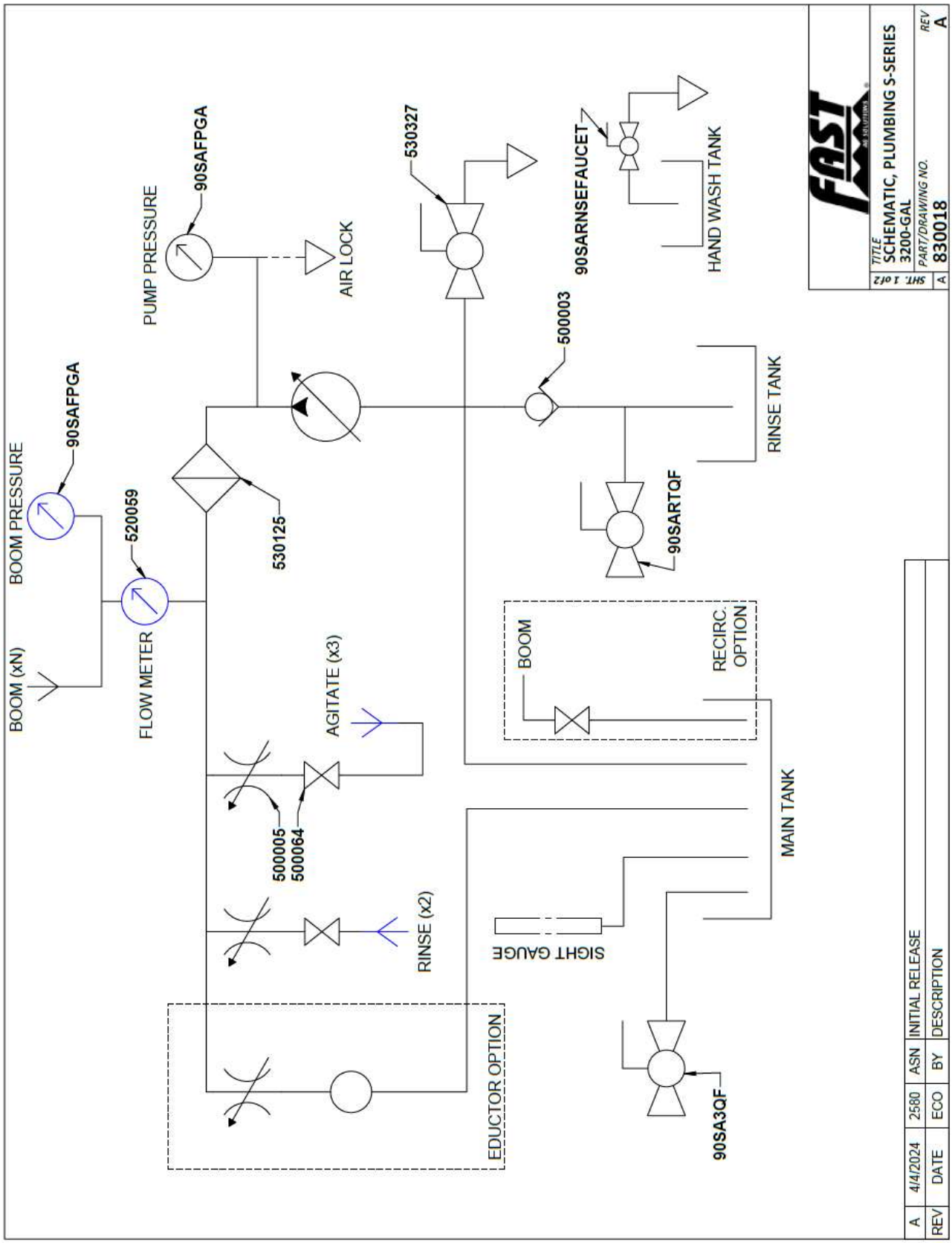

Plumbing Overview (36601)

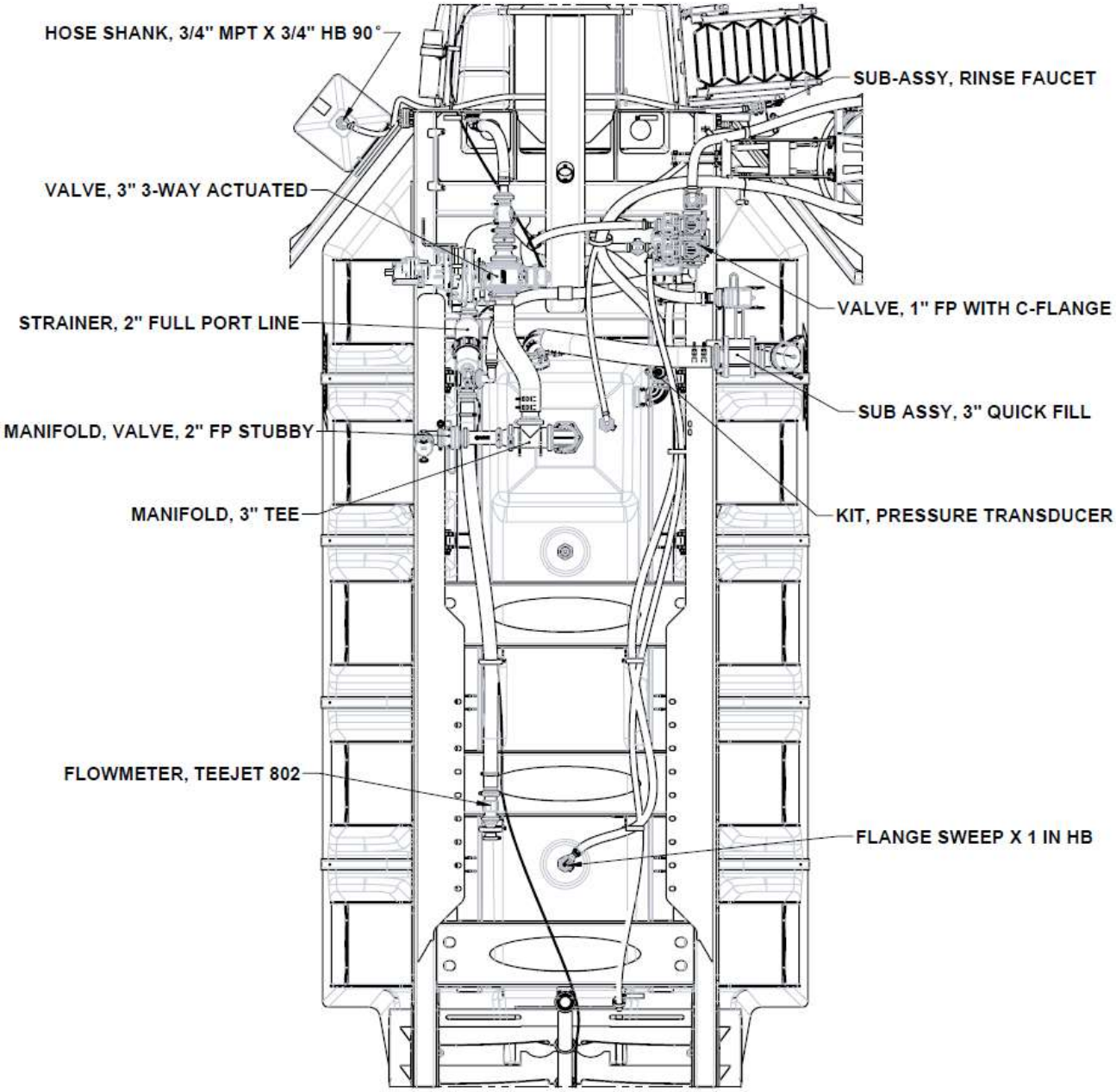

Main Tank Quick Fill

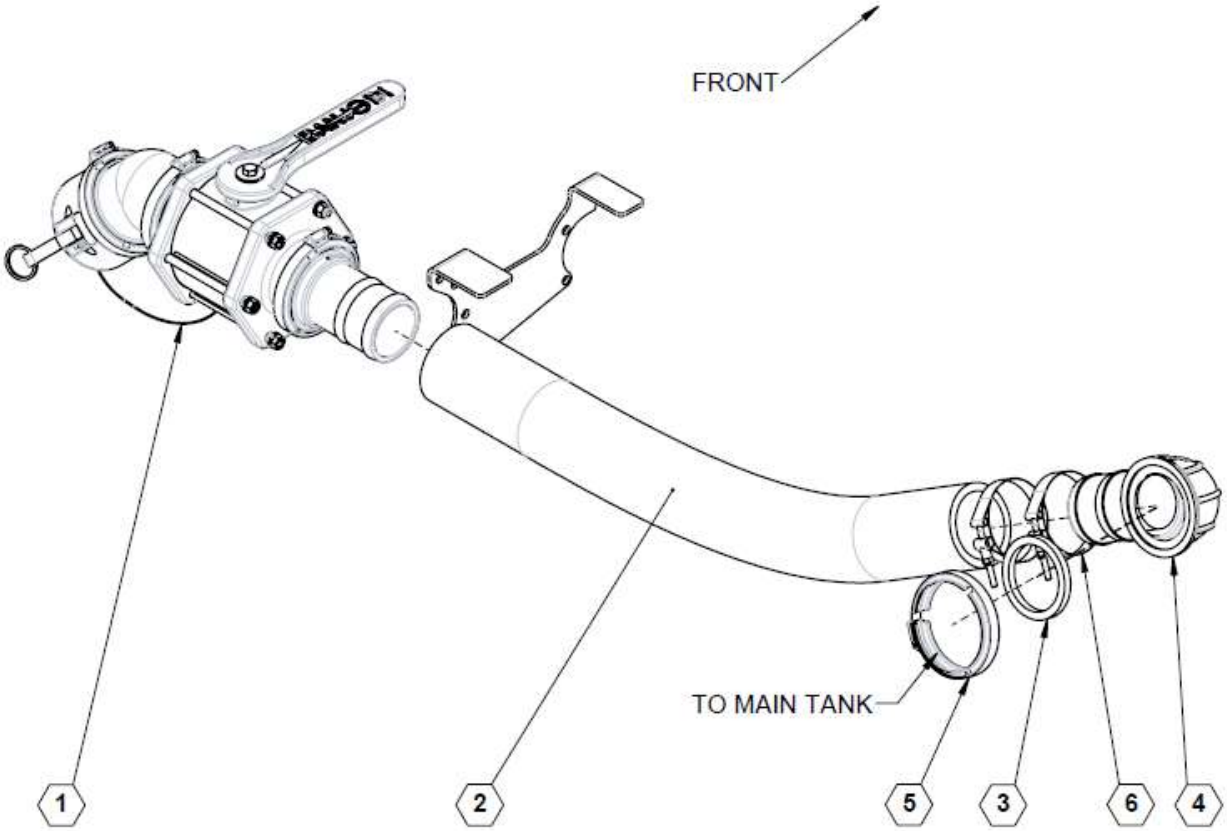

Parts List 36601: Main Tank Quick Fill

ITEM	PART NO.	QTY.	DESCRIPTION
1	90SA3QF	1	SUB ASSY, 3" QUICK FILL
2	**510038**	3	(FT) HOSE, 3IN EPDM
3	**530024**	1	GASKET, 3" EPDM
4	**530441**	1	FLANGE SWEEP, 90 X 3" HOSE BARB
5	**540003**	1	CLAMP, 3INCH WORM SCREW
6	**540009**	4	CLAMP, 3" T BOLT

Quick Fill Valve, 3”

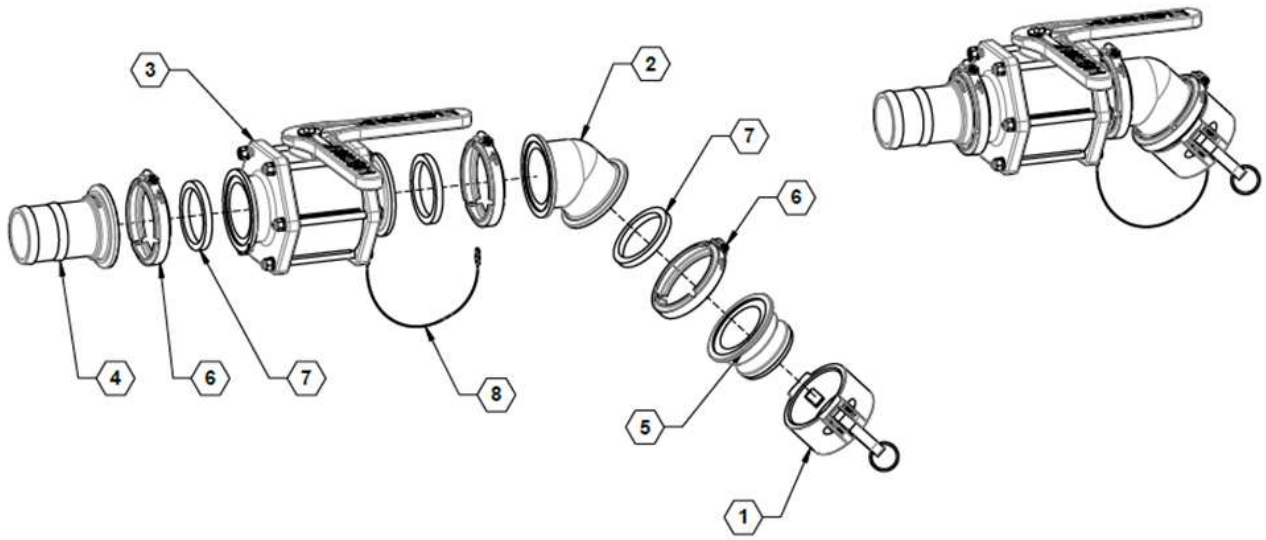

Parts List 90SA3QF: Quick Fill Valve, 3”

ITEM	PART NO.	QTY.	DESCRIPTION
1	**530023**	1	CAP, 3"
2	**530234**	1	3" COUPLER, 45 DEGREE
3	**500042**	1	MANIFOLD VALVE, STD PORT 3”
4	**530113**	1	Flanged 3" Hose Barb
5	**530233**	1	3" MANIFOLD X 3" MALE ADAPTER
6	**540003**	3	CLAMP, WORM SCREW 3"
7	**530024**	3	GASKET, 3" EPDM
8	**530179**	1	CABLE LANYARD

Main Tank Sump & Pump Selector Valve

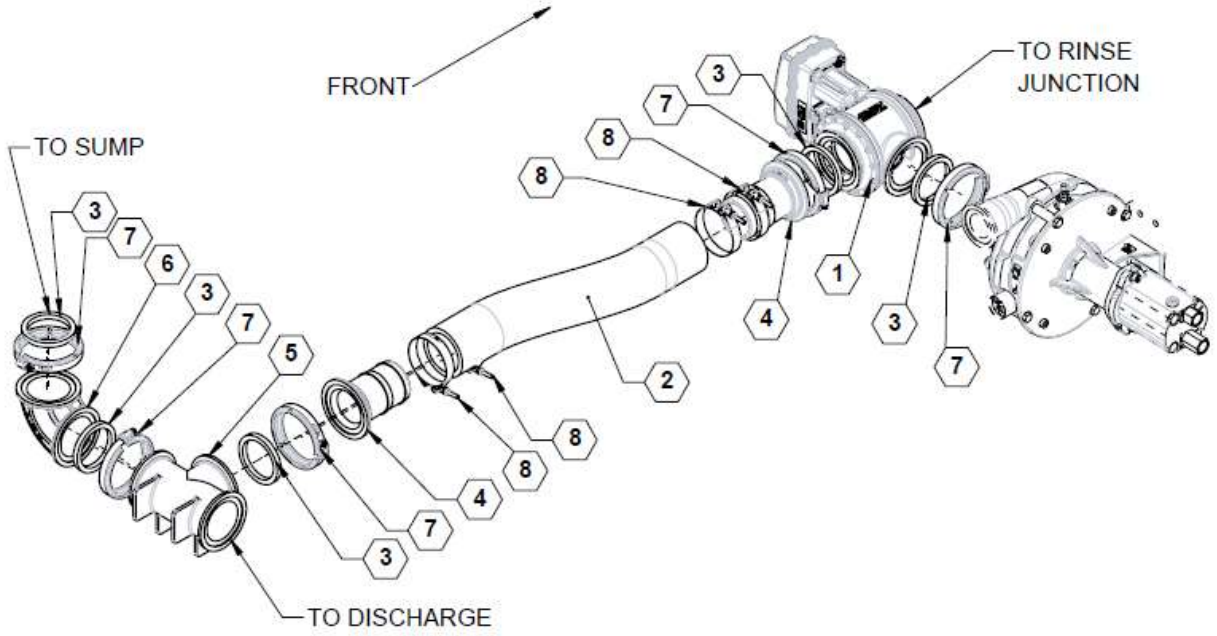

Parts List 36601: Main Tank Sump & Pump Selector Valve

ITEM	PART NO.	QTY.	DESCRIPTION
1	500080	1	VALVE, 3" 3-WAY ACTUATED
2	**510004**	2	(FT) HOSE, 3IN EPDM
3	**530024**	5	GASKET, 3" EPDM
4	**530113**	2	MANIFOLD FLANGE, 3" HB
5	**530115**	1	MANIFOLD, 3" TEE
6	**530439**	1	MANIFOLD SWEEP, FLANGE 3"
7	**540003**	5	CLAMP, 3INCH WORM SCREW
8	**540009**	4	CLAMP, 3" T BOLT

3-Way Electric Selector Valve Breakdown (500080)

MX12 3-way

Design Features:

- 3" Full port 3-Way ball valve
- Max PSI: 70 at 70° F
- Valve Body: Polypropylene
- Ball: Polypropylene
- Stem: 316 Stainless Steel
- Valve Seat: Virgin PTFE
- Stem Seal: Dual Fluorocarbon O-rings

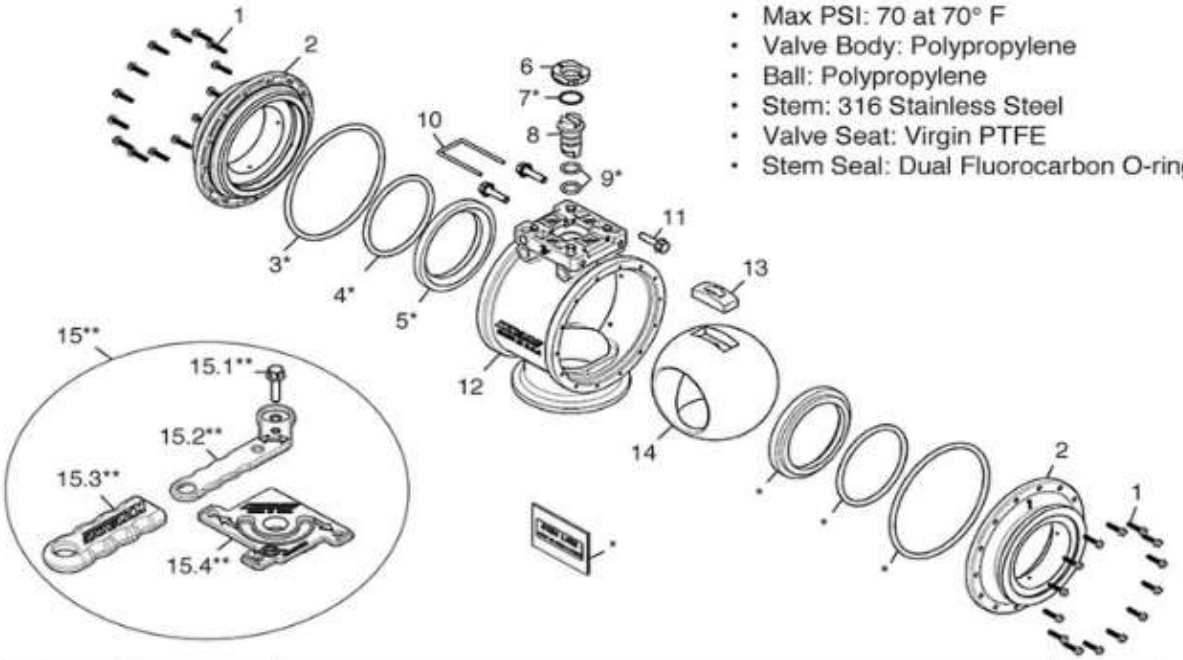

No.	Part Number	Description	Qty
1	100-0002	screw, #8, 3/4, stainless steel, 18-8	28
2	202-0080	endcap, M300, 3" full port flange	2
3*	205-0030	o-ring, EPDM	2
4*	205-0040	o-ring, EPDM	2
5*	206-0025	seat, 3" full port	2
6	QX4-121-3	stem retainer bushing, polypropylene	1
7*	QC3-170	thrust washer, PTFE	1
8	207-0001 207-0009**	stem, stainless steel inline stem, stainless steel inline, tapped for manual valve	1
9*	QC3-130	o-ring, #113, VITON	2
10	QX-103	hairpin, stainless steel	1
11	100340	bolt, serrated flange, 1/4 - 20 x 1	3
12	201-0115	valve body, 3-way, bottom load, M300, 3" polypropylene full port	1
13	250-0050	shoe, ball/stem engagement	1
14	204-0030 204-0057	valve ball, 3-way, 2" diverter valve ball, 3" polypropylene full port	1
15**		Manual Valve	
15.1**	100340	bolt, serrated flange, 1/4 - 20 x 1	1
15.2**	212-0010	handle	1
15.3**	212-0015	handle cover	1
15.4**	250-0040-P	retainer, stop plate	1
*	210-0026	valve repair kit, MX - 3" (M4K)	

*Items included in valve repair kits
**Manual valve only

See also: 3-Way Electric Selector Valve (500080) and https://view.publitas.com/kzvalve/kzvalve_catalog

Pump, Filter, and Sending

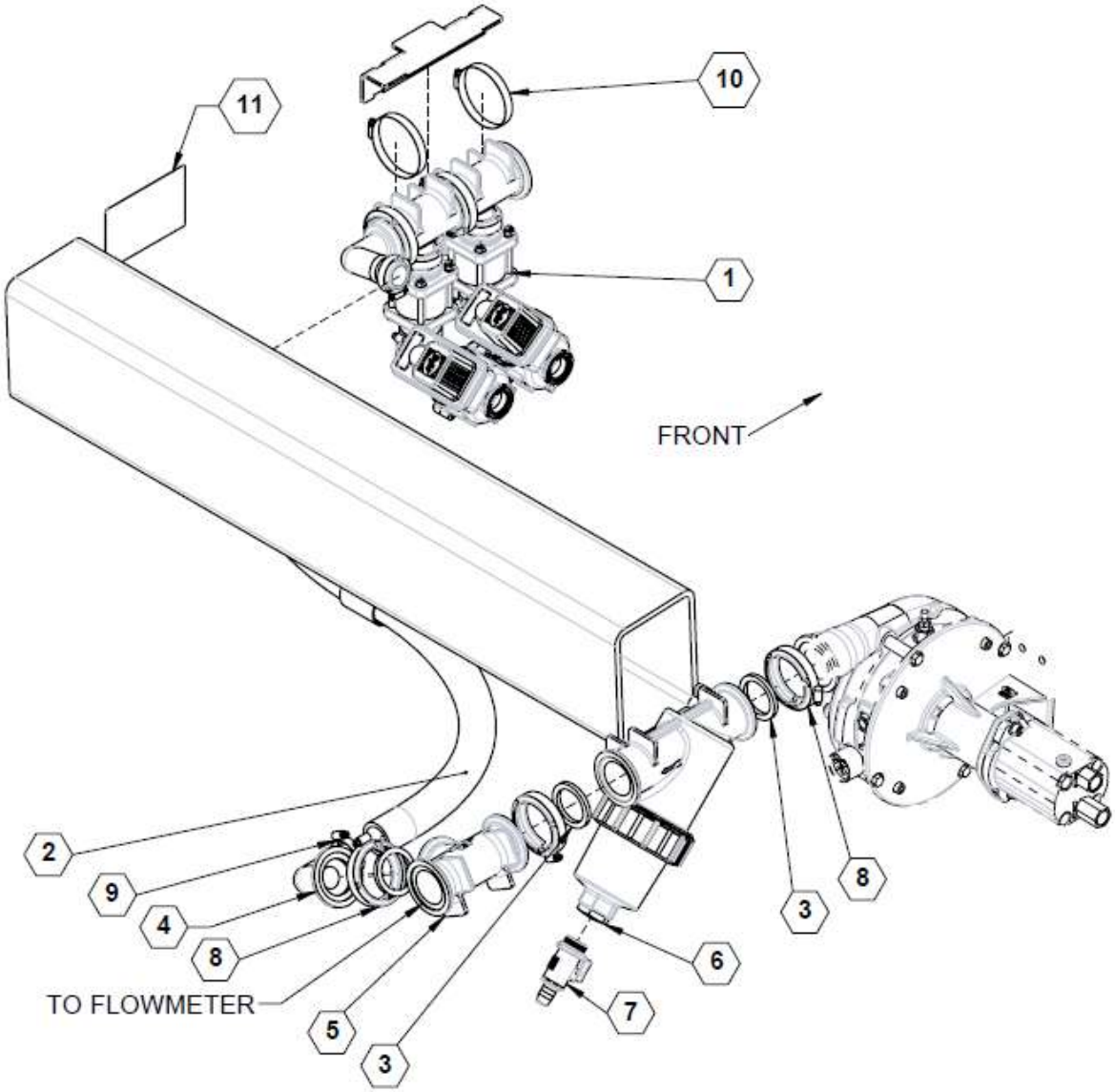

Parts List 36601: Pump, Filter, and Sending

ITEM	PART NO.	QTY.	DESCRIPTION
1	**36630**	1	DISTRIBUTION, AGITATION AND RINSE
2	**510014**	4	(FT) HOSE, 1.5IN EPDM
3	**530019**	3	GASKET, 2.00 EPDM
4	**530101**	1	2INCHFP FLANGE X 1-1/2INCHHB-90
5	**530110**	1	MANIFOLD TEE, 2"
6	**530125**	1	STRAINER, 2" FULL PORT LINE
7	**530517**	1	MICRO VALVE, 3/4" HB X 1" MPT
8	**540002**	3	CLAMP, FP WORM SCREW, 2.00
9	**540016**	1	CLAMP, SS 1.500 #24
10	**540020**	2	CLAMP, 3-1/2" SS
11	**800016**	1	DECAL, MAIN TANK VALVE OPERATION

See also:

- Pump ACE 255F-304 WET SEAL
- Pump ACE 255F-304 PWM WET SEAL
- Pump ACE FMC-750-HYD OASIS
- Pump ACE FMC-750-HYD PWM OASIS

Filter / Strainer at Pump

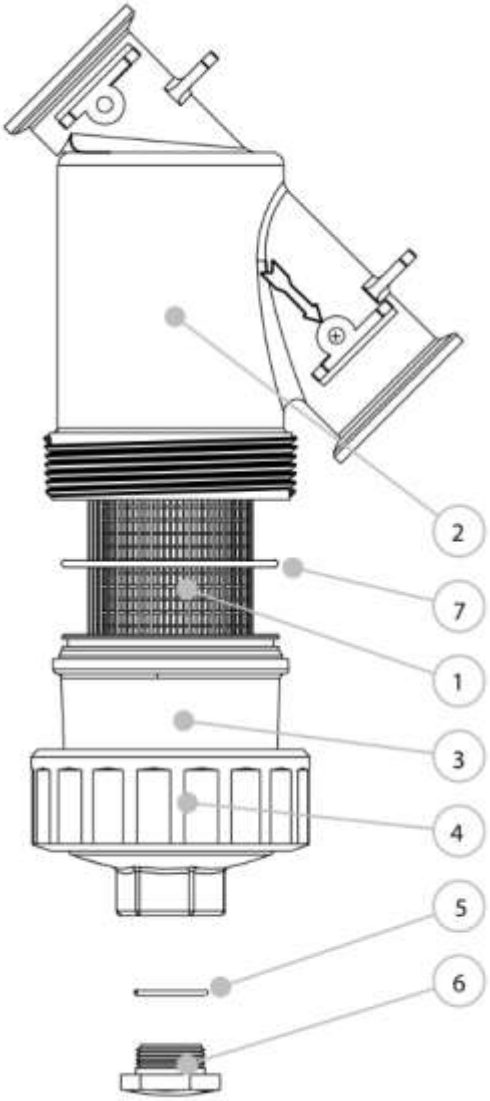

Parts List 530125: Filter / Strainer at Pump

ITEM	PART NO.	QTY.	DESCRIPTION
1	**LST230SS**	1	2" T Strainer Screen 30 Mesh 316 Stainless Steel
2	**MLS222B**	1	2" Full Port Manifold Y Strainer Body with Ribs
3	**MLS220C1**	1	2" Manifold Line Strainer Cap Assembly
4	**MLS220R1**	1	2" Full Port Manifold Strainer Ring
5	**LSQ200-R**	1	2" LSQ Plug O-Ring
6	**LSQ200-PL**	1	LSQ Strainer Plug
	530517		MICRO VALVE, 3/4" HB X 1" MPT
N/S	**MLS222BC**	1	2" Full Port Line Strainer Body & Cap
7	**MLS220G1**	1	2" Manifold Line Strainer Cap EPDM O-Ring

See https://www.banjocorp.com/banjo/Manifold-Flange-Connections/MLS222-30/p/2821523

Distribution, Agitation & Rinse

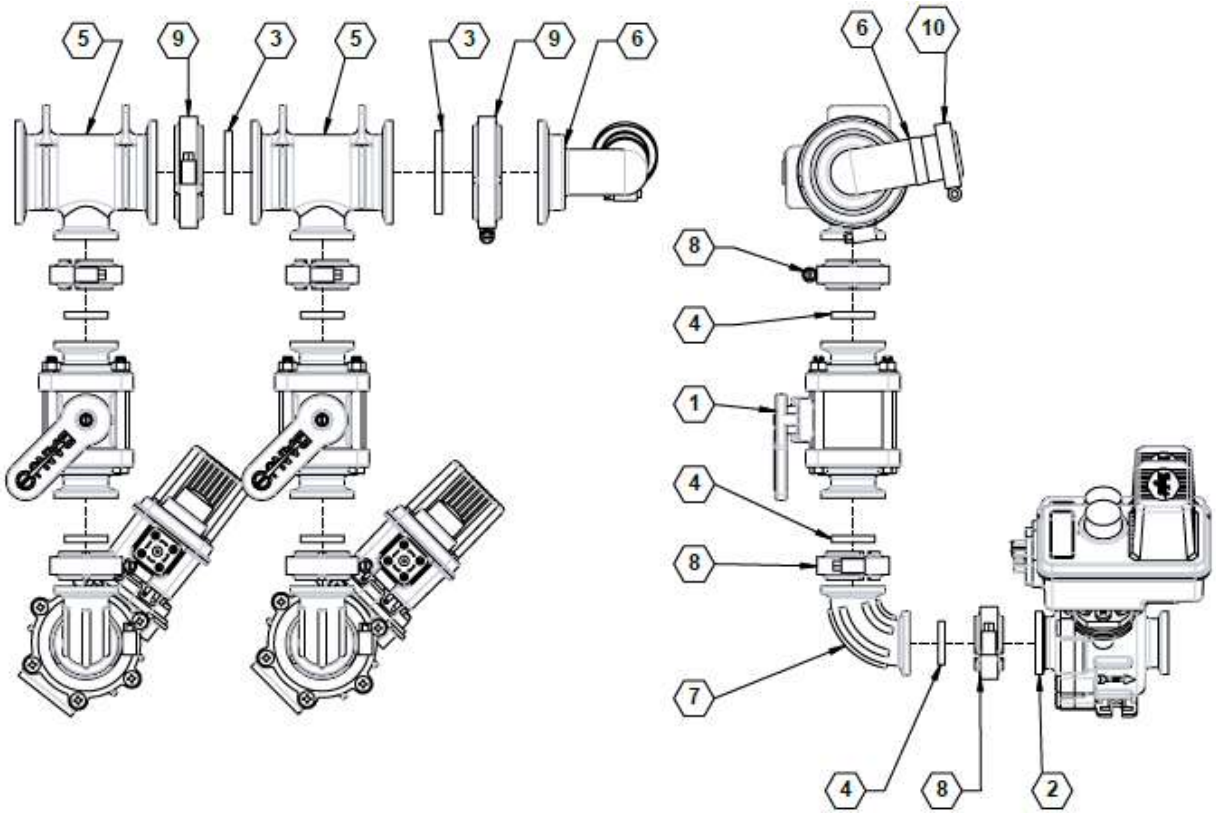

Parts List 36630: Distribution, Agitation & Rinse

ITEM	PART NO.	QTY.	DESCRIPTION
1	**500005**	2	VALVE, 1" FP WITH C-FLANGE
2	**500064**	2	VALVE, 356 SERIES ON/OFF ELEC. AGITATION
3	**530019**	2	GASKET, 2.00 EPDM
4	**530068**	6	GASKET, 1.00 EPDM
5	**530099**	2	MANIFOLD, 2" FP X 1" FLANGE TEE
6	**530101**	1	2INCHFP FLANGE X 1-1/2INCHHB-90
7	**530424**	2	MANIFOLD SWEEP, 1" FLANGE
8	**540000**	6	CLAMP, WORM SCREW, 1.00
9	**540002**	2	CLAMP, FP WORM SCREW, 2.00
10	**540016**	1	CLAMP, SS 1.500 #24
11	**632155**	1	CAB BOX, ELECTRIC RINSE & AGITATE
12	**632156**	1	HARNESS, ELECTRIC RINSE & AGITATE

Distribution Electric Shutoff Valve

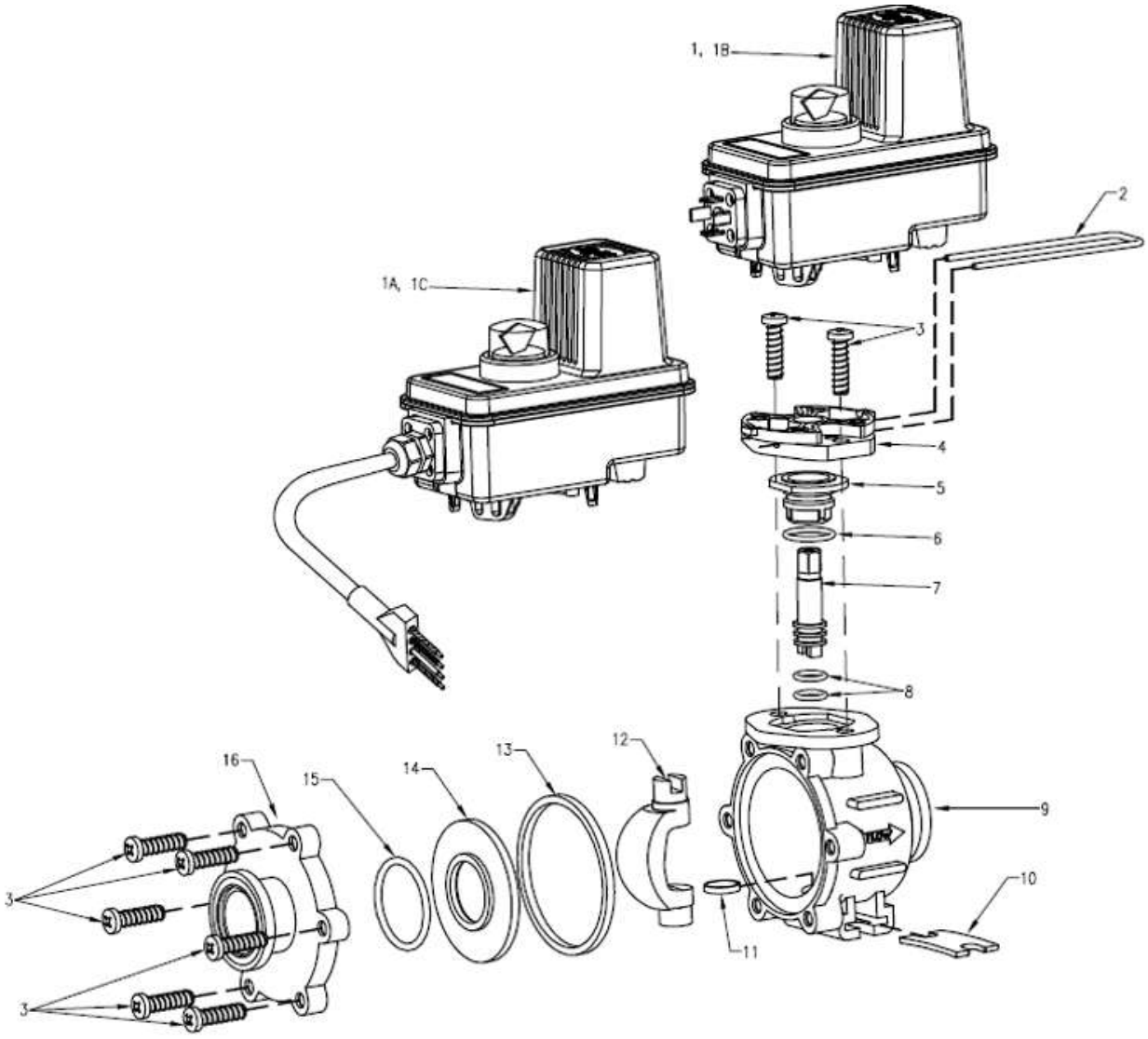

Parts List 500064: Distribution Electric Shutoff Valve

	ITEM	PART NO.	DESCRIPTION
	1	50515-25DP ■	BEC Motor, 25-RPM (0.6-SEC), DIN Connection, Positively Switched
	1A	50515-25CP03 ■	BEC Motor, 25-RPM (0.6-SEC), 0.3-Meter Cable Connection, Positively Switched
		50515-25CP05 ■	BEC Motor, 25-RPM (0.6-SEC), 0.5-Meter Cable Connection, Positively Switched
		50515-25CP15 ■	BEC Motor, 25-RPM (0.6-SEC), 1.5-Meter Cable Connection, Positively Switched
		50515-25CP60 ■	BEC Motor, 25-RPM (0.6-SEC), 6.0-Meter Cable Connection, Positively Switched
	1B	50533-25D	BE Motor, 25-RPM (0.6-SEC), DIN Connection
	1C	50533-25C03	BE Motor, 25-RPM (0.6-SEC), 0.3-Meter Cable Connection
		50533-25C05	BE Motor, 25-RPM (0.6-SEC), 0.5-Meter Cable Connection
		50533-25C15	BE Motor, 25-RPM (0.6-SEC), 1.5-Meter Cable Connection
		50533-25C60	BE Motor, 25-RPM (0.6-SEC), 6.0-Meter Cable Connection
	2	CP50517-SSPV	Retaining Clip, 304 Stainless Steel - Passivated
	3	CP45517-1 1/8-SS	Screw, Phillips/Sq. Pan Head, 302 Stainless Steel (8 Req'd)
	4	CP50514-PP	Motor Adapter, Glass Filled Polypropylene (Black)
	5	CP50505-RYTON	Stem Bushing, Ryton (Black)
*	6	CP7717-2-117-VI	O-Ring, Viton
	7	CP50532-316SS	Stem, 316 Stainless Steel
*	8	CP7717-M12X2.5-VI	O-Ring, Viton (2 Req'd)
	9	CP50501-PP	Body, Glass Filled Polypropylene (Black)
	10	CP50507-304SS	Mounting Plate, 304 Stainless Steel
*	11	CP50509-CTEF	Lower Bushing, Carbon Filled Teflon
	12	CP50506-316SS	Ball, Polished 316 Stainless Steel
*	13	CP50504-VI	Gasket, Viton
*	14	CP50503-CTEF	Seal, Carbon Filled Teflon
*	15	CP7717-2-223-VI	O-Ring, Viton
	16	CP50502-PP	End Cap, Glass Filled Polypropylene (Black)
	AB356-KIT, Spare Parts Kit (Includes all items marked with *)		

■ Note: For Negatively Switched Motors Specify "N" rather than "P" in Motor Part Number
Example: 50515-25CN05

See also:

- https://www.teejet.com/-/media/dam/agricultural/usa/technical-documentation/other/pl356_tj.pdf
- TeeJet Spare Parts Kit AB346B-KIT

Standard Flowmeter

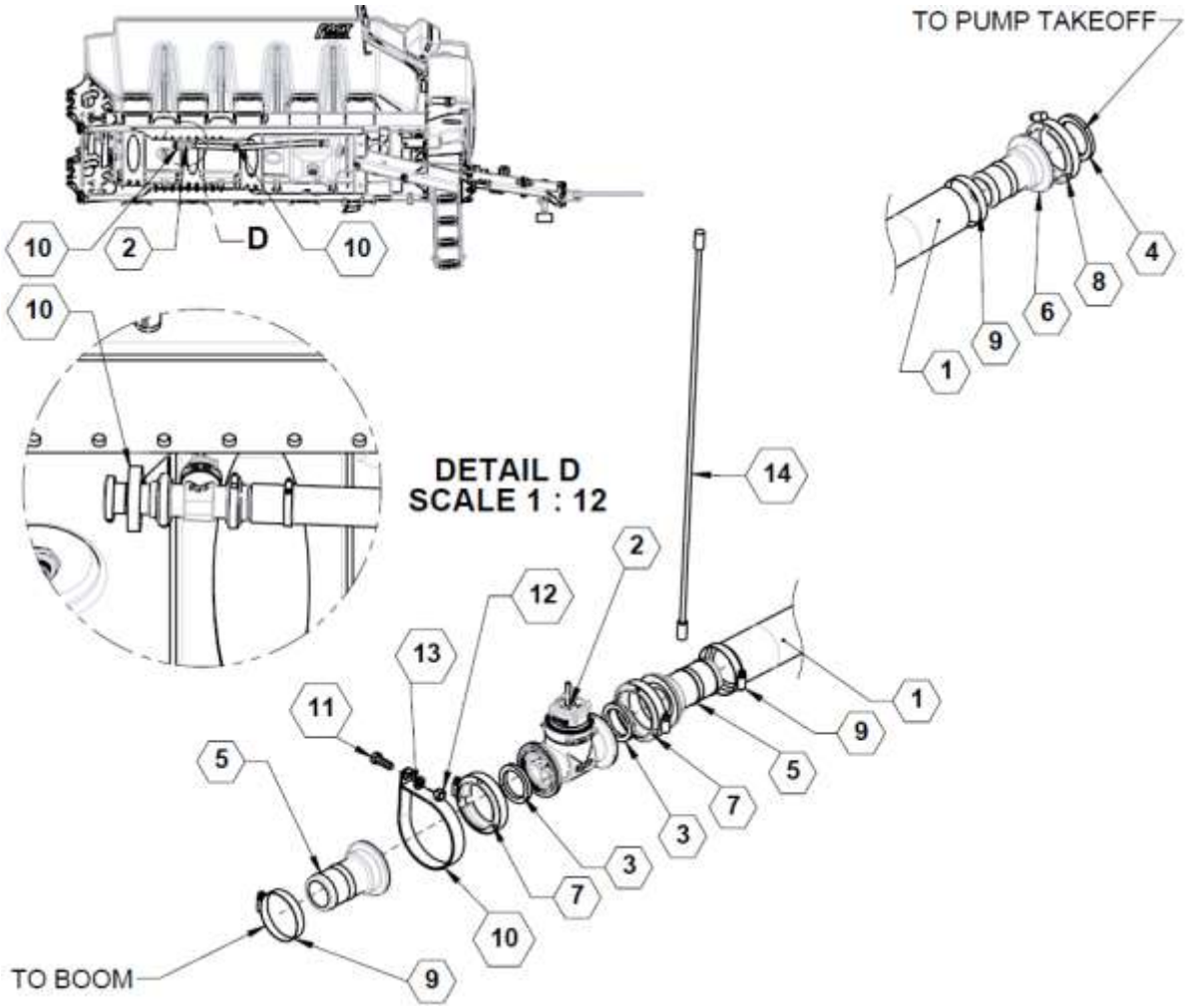

Parts List 36601: Standard Flowmeter

ITEM	PART NO.	QTY.	DESCRIPTION
1	**510017**	6	(FT) HOSE, 2IN EPDM
2	**520059**	1	FLOWMETER, TEEJET 802
3	**530014**	2	GASKET, 1.500 EPDM
4	**530019**	1	GASKET, 2.00 EPDM
5	**530082**	1	FITTING, 2.00 FP FLANGE X 2.00 HB, POLY
6	**530103**	2	FITTING, 2.00 FLANGE X 2.00 HB, POLY
7	**540001**	2	CLAMP, 2.00 STD WORM SCREW
8	**540002**	1	CLAMP, FP WORM SCREW, 2.00
9	**540018**	3	CLAMP, 2-3/4" SS
10	**540053**	2	P-CLAMP, 4" W/3/8" HOLE
11	**596128M**	2	BOLT, HH 3/8-16 X 1 GR5 MAGNI
12	**596213M**	2	NUT, HEX 3/8-16 MAGNI
13	**596250M**	2	LOCKWASHER, 3/8 MAGNI
14	**631848**	1	12’ FLOWMETER CABLE EXT

Standard Flowmeter Breakdown

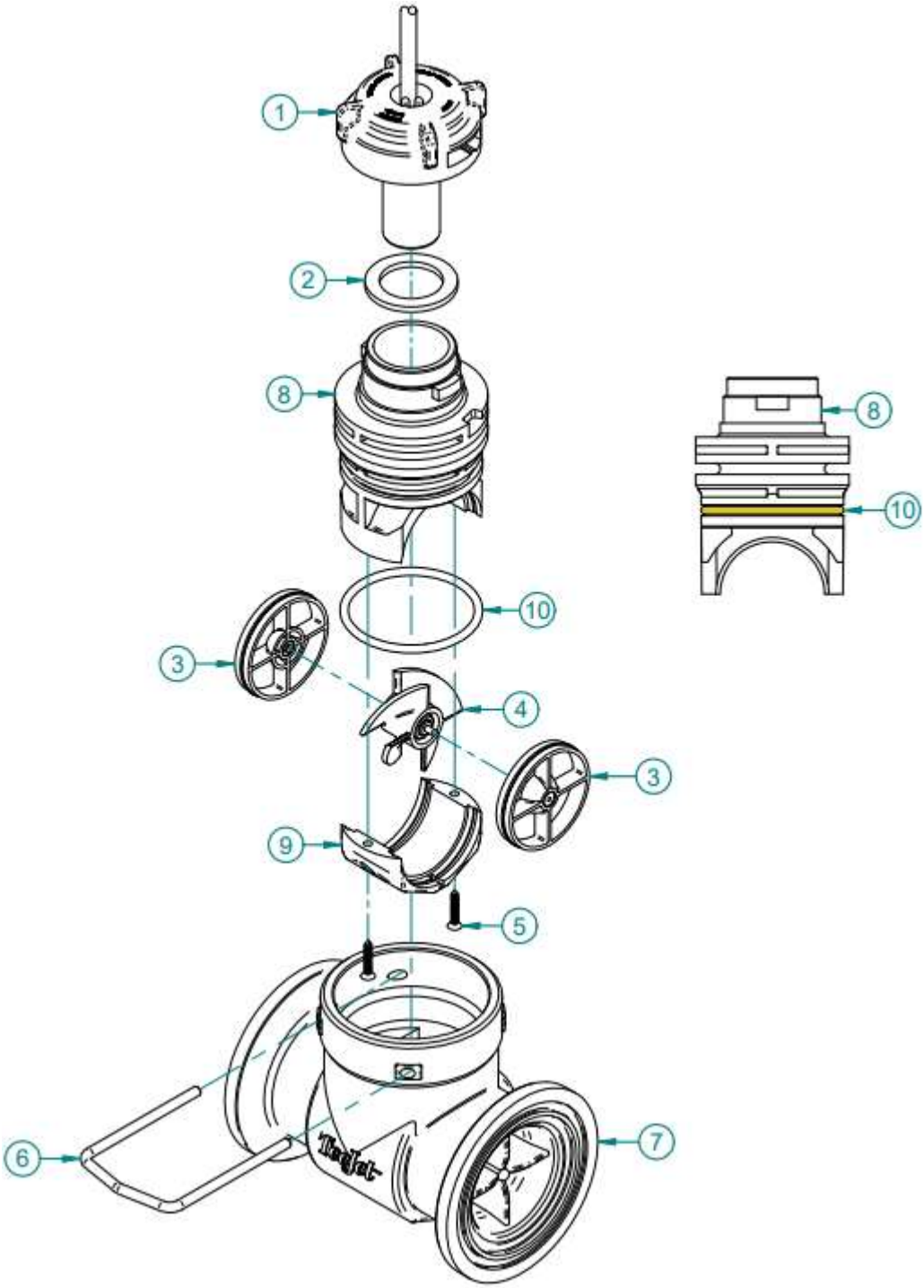

See https://www.teejet.com/-/media/dam/agricultural/usa/technical-documentation/product-data-sheet/c-57-10122_tj.pdf

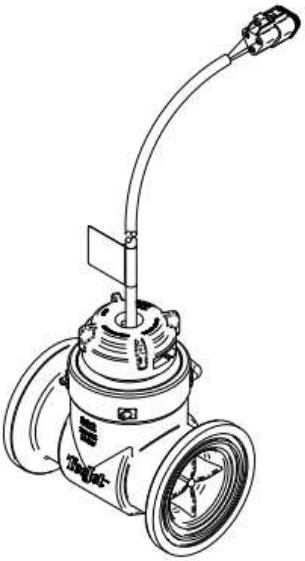

Parts List 520059: Standard Flowmeter Breakdown

Item	Description	Part Number	QTY	U.M.
1	Sensor, PCB Assembly	16-00024	1	EA
2	Washer, Seat	57-10111	1	EA
3	Guide Vane Bearing 802 FM	57-10123	2	EA
4	Turbine Assembly 802 FM	57-10124	1	EA
5	Screw, #6-5/8" LG Flat Head	60-04031	2	EA
6	PIN, RETAINING, 802 FM	60-06008	1	EA
7	Body, 802 Flowmeter	64-50065	1	EA
8	Insert, Body 801 FM	64-50066	1	EA
9	Endcap, 802 Flowmeter	64-50067	1	EA
10	O-RING M46x3	64-90049	1	EA

90-50256 KIT, REPAIR, 802 FLOWMETER				
Item	Description	Part Number	QTY	U.M.
3	GUIDE VANE BEARING, 802	57-10123	2	EA
4	TURBINE ASSEMBLY, 802	57-10124	1	EA
5	SCREW,SHEET MTL, #4x 5/8"	60-04031	2	EA
8	INSERT, BODY, 802	64-50066	1	EA
9	INSERT, END CAP, 802	64-50067	1	EA
10	O-RING, 802 FLOWMETER	64-90049	1	EA

High Flow Option, 2”

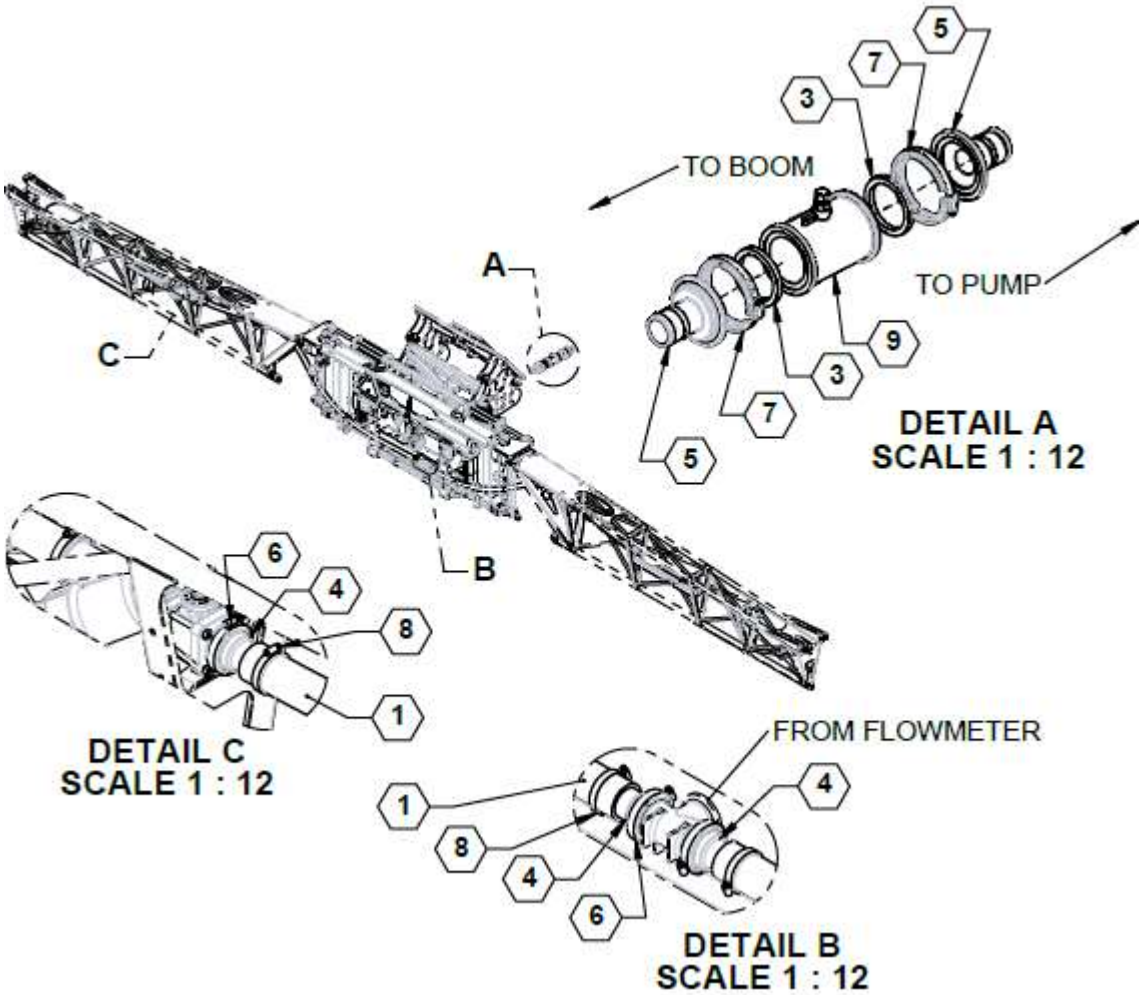

Parts List 36602: High Flow Option, 2”

ITEM	PART NO.	QTY.	DESCRIPTION
1	**510017**	26	(FT) HOSE, 2IN EPDM
2	**530014**	4	GASKET, 1.500 EPDM
3	**530024**	2	GASKET, 3" EPDM
4	**530082**	4	FITTING, 2.00 FLANGE X 2.00 HB, POLY
5	**530111**	2	MANIFOLD, 3" X 2" HB
6	**540001**	4	CLAMP, 2.00 STD WORM SCREW
7	**540003**	2	CLAMP, 3INCH WORM SCREW
8	**540018**	4	CLAMP, 2-3/4" SS
9	**632125**	1	FLOWMETER, 200P

High Flow Flowmeter Breakdown

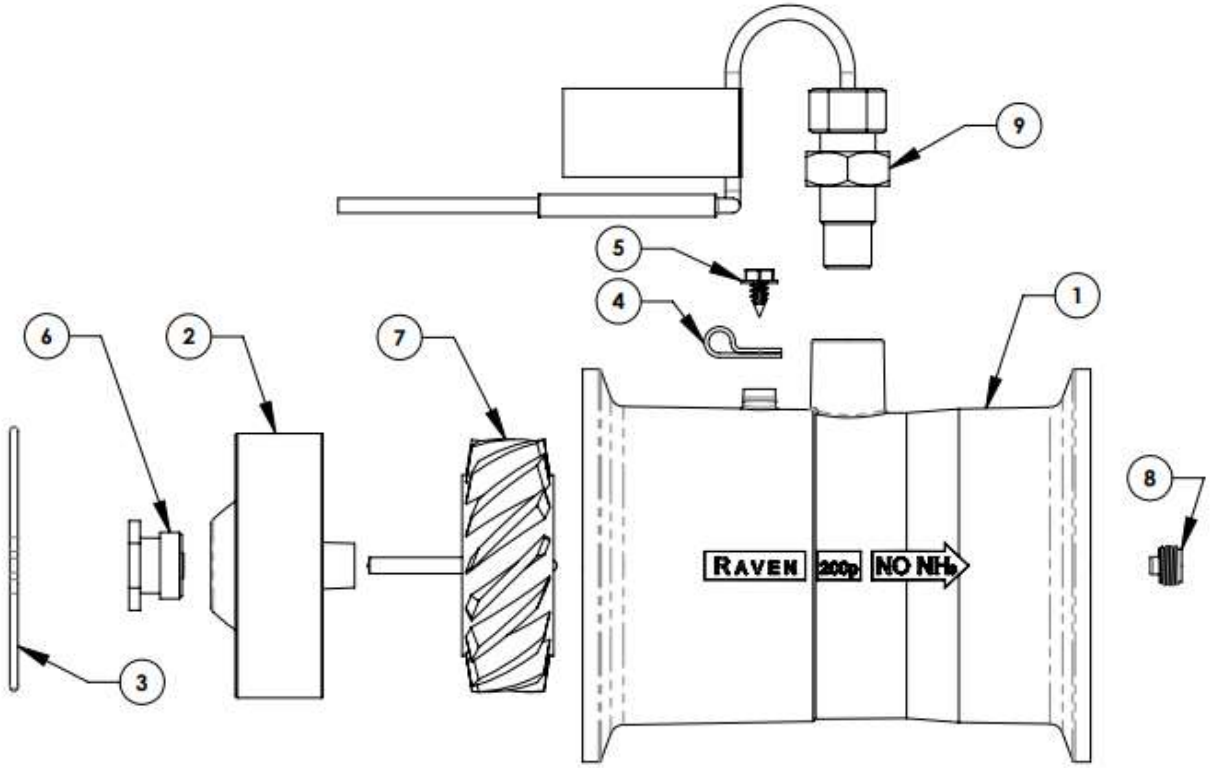

Parts List 632125: High Flow Flowmeter Breakdown

ITEM	DESCRIPTION	RAVEN P/N:
1	BODY, MOLDED, RFM-200p, FLOWMETER	106-0159-711
2	HUB/BEARING ASSEMBLY, UPSTREAM, RFM-200p	063-0173-581
3	RING, RETAINING, WIREFORM, RFM-200	335-0003-199
4	CLAMP, CABLE, PLASTIC, 1/4" x 1/2"	435-3002-017
5	SCREW, THREAD FORMING, #10-16 UNC x 3/8" LONG	310-0002-137
6	TURBINE, STUD/BEARING ASSEMBLY, RFM-200p	063-0159-575
7	TURBINE, FLOWMETER, 4 MAGNET, RFM-200p	063-0173-597
8	STUD, DOWNSTREAM, CUP BEARING, FLOWMETER	063-0173-744
9	SENSOR ASSEMBLY, EXTERNAL, DTM SENSOR ASSEMBLY, EXTERNAL, DT SENSOR ASSEMBLY, EXTERNAL, CON-X-ALL SENSOR ASSEMBLY, EXTERNAL, METRI-PACK (JD)	063-0172-458 063-0172-447 063-0172-004 063-0173-855
	REF. KIT 117-0171-645 FOR ITEMS 3, 6, 7, & 8	

See https://ravenindustries.mcoutput.com/assets/Content/Resources/PDF_SysDiagrams/054-0159-346-C.pdf

Agitation Hose & Fittings

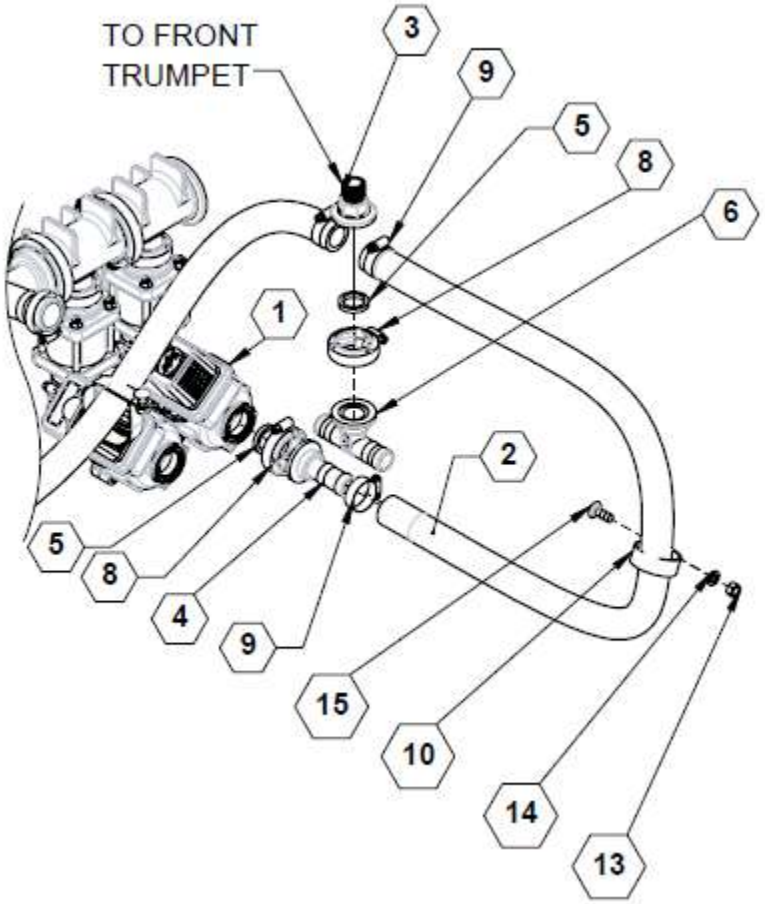

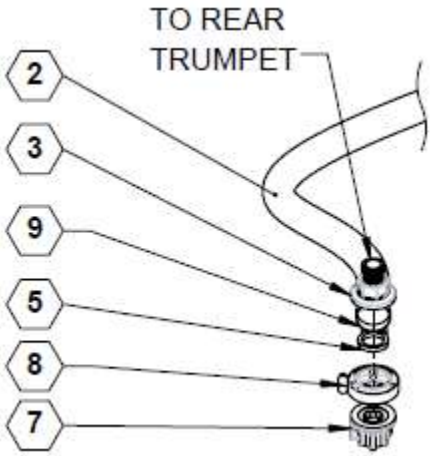

Parts List 36601: Agitation Hose & Fittings

ITEM	PART NO.	QTY.	DESCRIPTION
1	**36630**	1	DISTRIBUTION, AGITATION AND RINSE
2	**510016**	15	(FT) HOSE, 1IN EPDM
3	**530062**	3	FLANGE, 1" X 3/4" MALE THREAD
4	**530066**	1	FITTING, 1.00 MANIFOLD X 1.00 HB
5	**530068**	4	GASKET, 1.00 EPDM
6	**530431**	1	MANIFOLD FITTING X 1" HB TEE
7	**530445**	1	FLANGE SWEEP X 1 IN HB
8	**540000**	4	CLAMP, WORM SCREW, 1.00
9	**540014**	4	HOSE CLAMP, SS 1.00 #16
10	**540051**	1	P-CLAMP, 2" W/3/8" HOLE
11	**540052**	2	P-CLAMP, 3" W/3/8" HOLE
12	**596128M**	1	BOLT, HH 3/8-16 X 1 GR5 MAGNI
13	**596213M**	3	NUT, HEX 3/8-16 MAGNI
14	**596250M**	3	LOCKWASHER, 3/8 MAGNI
15	**596592M**	2	BOLT, CARRIAGE 3/8-16 X 1 MAGNI

See also: 3200 Gal. Tank with Fittings

Rinse Hose & Fittings

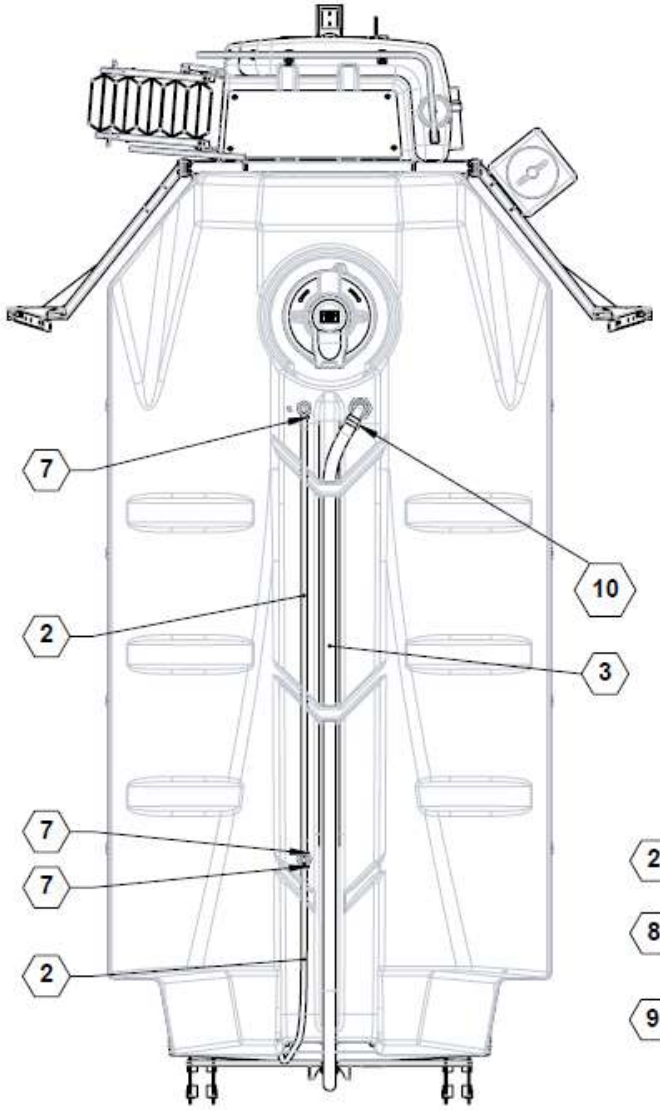

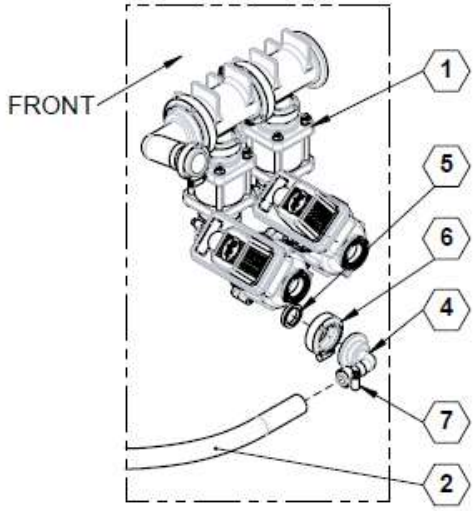

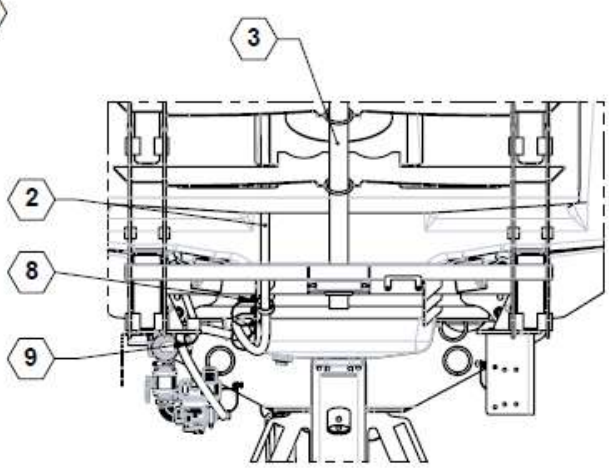

Parts List 36601: Rinse Hose & Fittings

ITEM	PART NO.	QTY.	DESCRIPTION
1	**36630**	1	DISTRIBUTION, AGITATION AND RINSE
2	**510019**	29	(FT) HOSE, 0.75IN EPDM
3	**510025**	17	(FT) HOSE, 2IN PVC SUCTION
4	**530060**	1	ELBOW, 1.00 FLANGE X .750 HB 90~
5	**530068**	1	GASKET, 1.00 EPDM
6	**540000**	1	CLAMP, WORM SCREW, 1.00
7	**540013**	4	HOSE CLAMP, SS .75 #12
8	**540051**	1	P-CLAMP, 2" W/3/8" HOLE
9	**540052**	1	P-CLAMP, 3" W/3/8" HOLE
10	**540069**	1	HOSE CLAMP, 2.00 T-BOLT
11	**596128M**	1	BOLT, HH 3/8-16 X 1 GR5 MAGNI
12	**596213M**	1	NUT, HEX 3/8-16 MAGNI
13	**596250M**	1	LOCKWASHER, 3/8 MAGNI

See also: 3200 Gal. Tank with Fittings

Rinse Tank Quick Fill

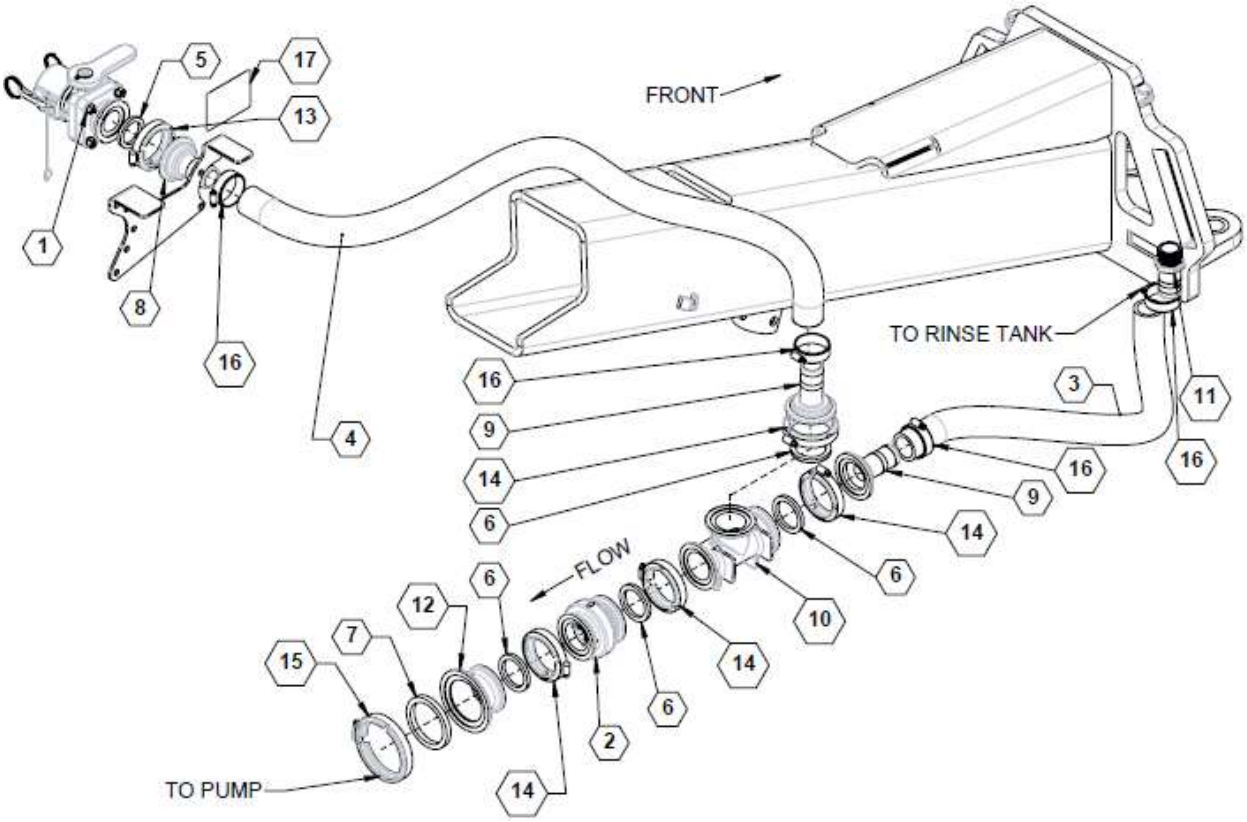

Parts List 36601: Rinse Tank Quick Fill

ITEM	PART NO.	QTY.	DESCRIPTION
1	90SARTQF	1	SUB-ASSY, RINSE TANK QUICK FILL
2	**500003**	1	VALVE, CHECK 220 1NO. SPRING
3	**510002**	3	(FT) HOSE, 1.5IN SUCTION
4	**510002**	4	(FT) HOSE, 1.5IN SUCTION
5	**530014**	1	GASKET, 1.500 EPDM
6	**530019**	4	GASKET, 2.00 EPDM
7	**530024**	1	GASKET, 3" EPDM
8	**530079**	1	MANIFOLD FLANGE, 2" X 1-1/2" HB
9	**530100**	2	MANIFOLD FLANGE, 2" FP X 1-1/2" HB
10	**530110**	1	MANIFOLD TEE, 2"
11	**530256**	1	1 1/4"MPT X 1 1/2" STRAIGHT HOSE BARB
12	**530316**	1	MANIFOLD REDUCER 3" X 2" CPLR
13	**540001**	1	CLAMP, 2.00 STD WORM SCREW
14	**540002**	4	CLAMP, FP WORM SCREW, 2.00
15	**540003**	1	CLAMP, 3INCH WORM SCREW
16	**540079**	4	CLAMP, HOSE, PRESSURE SEAL HD, 1.62-2.12”
17	**800017**	1	DECAL, MAIN TANK VALVE OPERATION

Quick Fill Valve, 2”

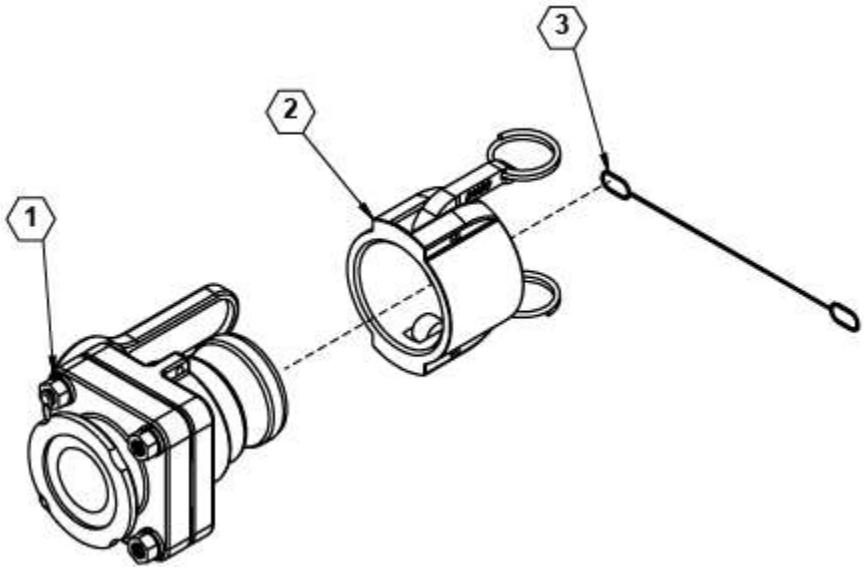

Parts List 90SARTQF: Quick Fill Valve, 2”

ITEM	PART NO.	QTY.	DESCRIPTION
1	**500037**	1	VALVE 2" POLY SHORT FLANGE
2	**530017**	1	CAP, 2"
3	**530179**	1	CABLE LANYARD 12"

Pressure Gauges & Sensing

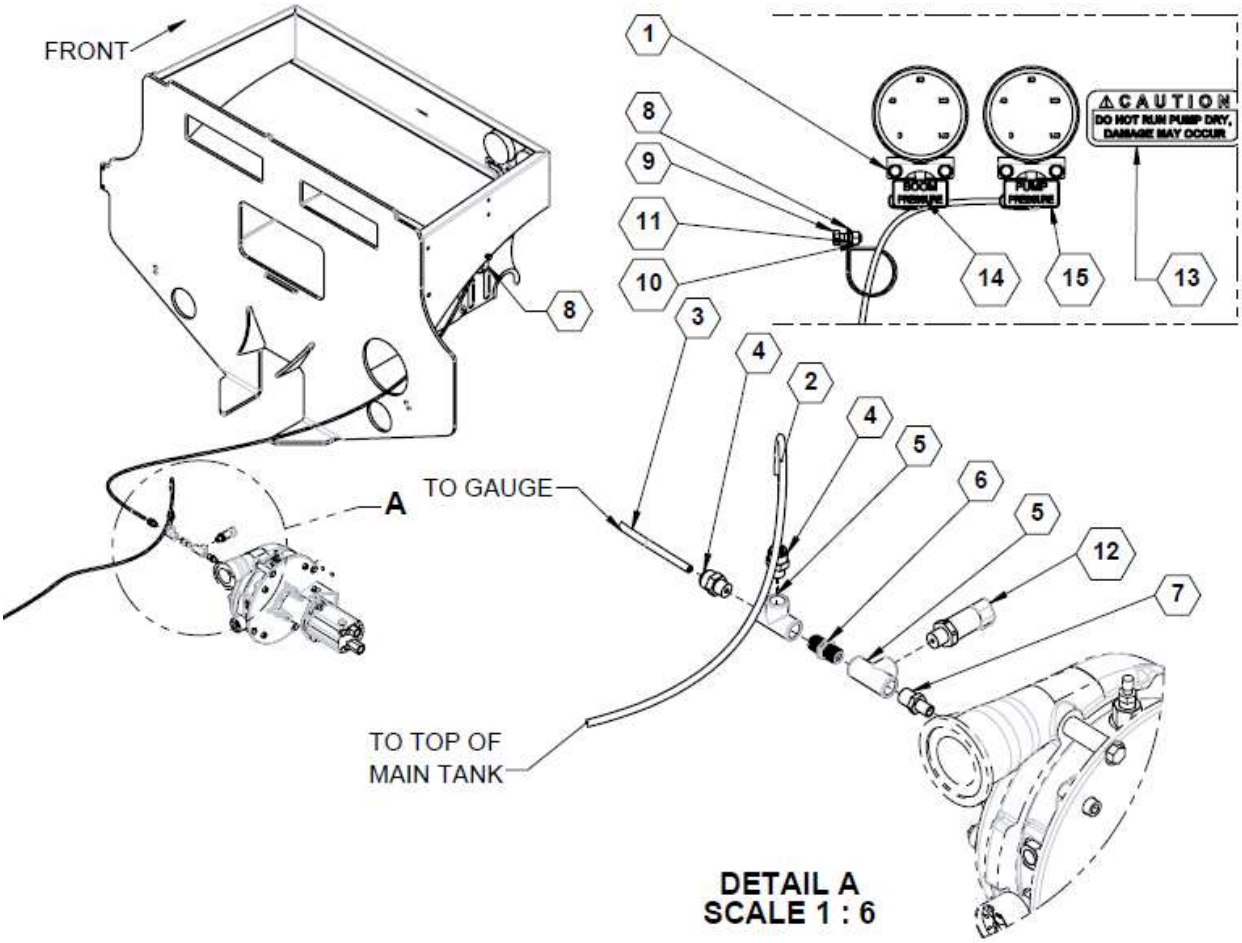

Parts List 36601: Pressure Gauges & Sensing

ITEM	PART NO.	QTY.	DESCRIPTION
1	90SAFPGA	2	FRONT PRESSURE GAUGE ASSY
2	510023	29	(FT) TUBING, 0.25IN POLY
3	510023	7	(FT) TUBING, 0.25IN POLY
4	530001	2	MALE CONNECTOR, 1/4" X 1/4"
5	530400	2	TEE 1/4" FPT, POLY
6	530401	1	NIPPLE, 1/4 MPT x 1/4 MPT, POLY
7	530543	1	REDUCER NIPPLE, 1/4 X 1/8 MPT
8	540051	1	P-CLAMP, 2" W/3/8" HOLE
9	596128M	1	BOLT, HH 3/8-16 X 1 GR5 MAGNI
10	596213M	1	NUT, HEX 3/8-16 MAGNI
11	596250M	1	LOCKWASHER, 3/8 MAGNI
12	632036	1	TRANSDUCER, PRESSURE
13	800282	1	DECAL, DO NOT RUN PUMP DRY. ENGLISH
14	800340	1	DECAL, BOOM PRESSURE
15	800370	1	DECAL, PUMP PRESSURE

Pressure Gauge

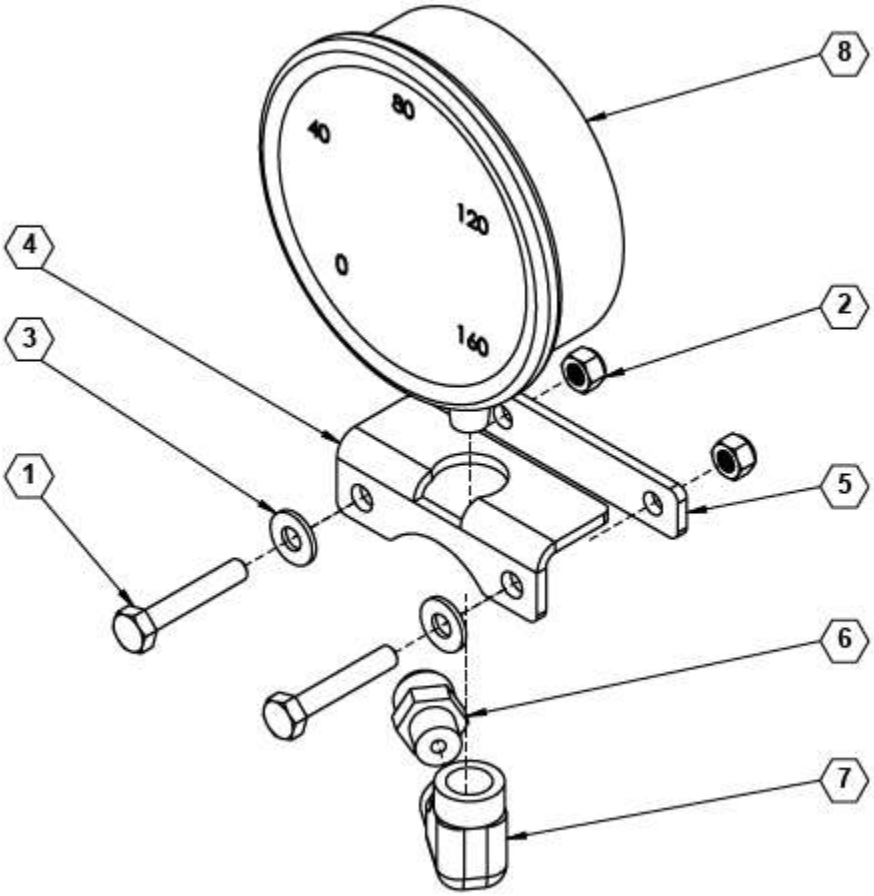

Parts List 90SAFPGA: Pressure Gauge

ITEM	PART NO.	QTY.	DESCRIPTION
1	**103**	2	BOLT, HH 1/4-20X1-1/2 GR5 ZP
2	**227**	2	NYLOCK NUT 1/4-20 ZP
3	**256**	2	WASHER, FLAT, 1/4 ZINC
4	**11758**	1	BRACKET, PRESSURE GAUGE
5	**11786**	1	GAUGE STRAP
6	**530001**	1	MALE CONNECTOR, 1/4" X 1/4"
7	**610006**	1	1/4" PIPE ELBOW 90 DEGREE SS
8	**790020**	1	GAUGE, FAST LOGO 160PSI

Eductor Supply and Hillside Pressure Compensation

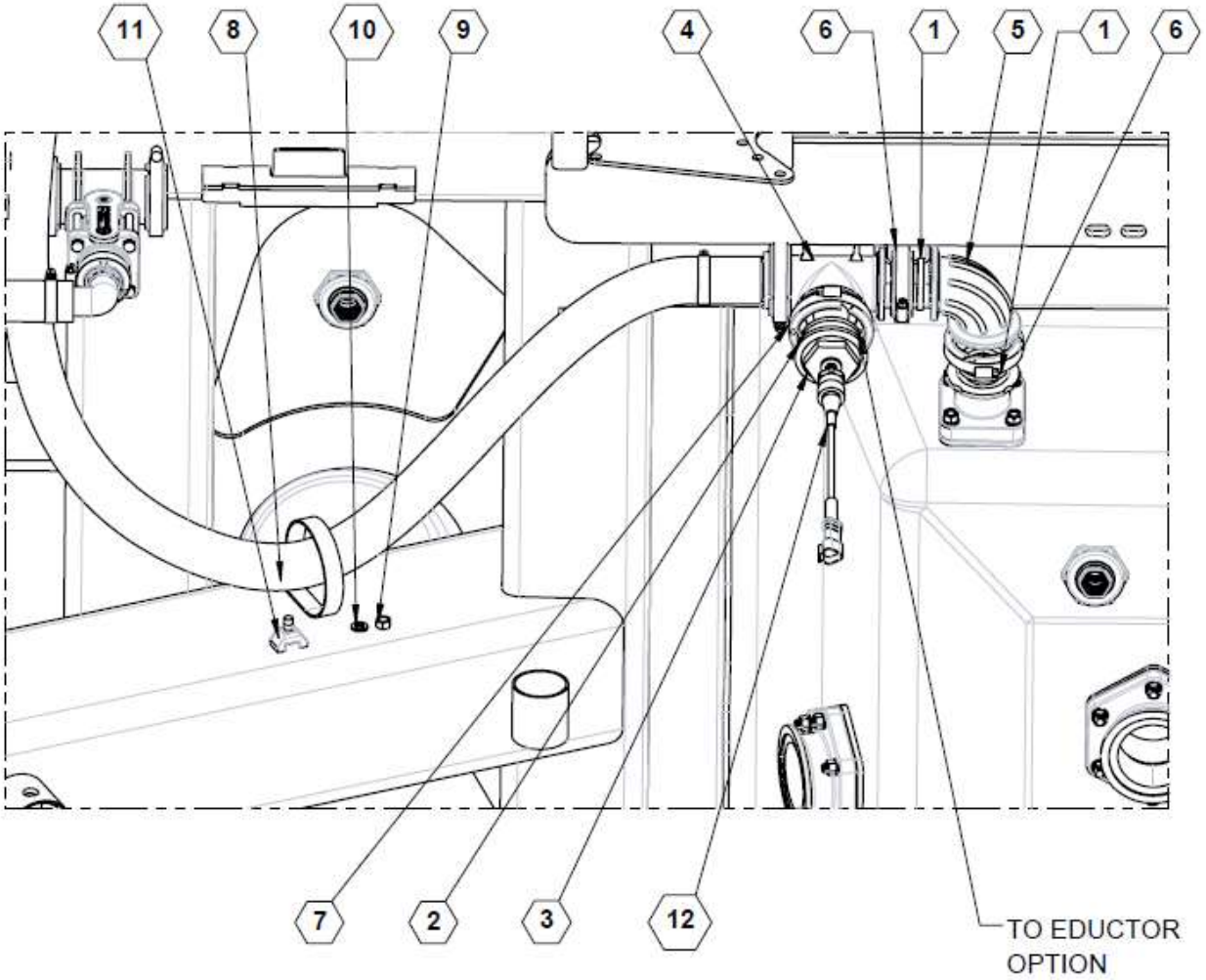

Parts List 36601: Eductor Supply and Hillside Pressure Compensation

ITEM	PART NO.	QTY.	DESCRIPTION
1	**530014**	2	GASKET, 1.500 EPDM
2	**530019**	1	GASKET, 2.00 EPDM
3	**530094**	1	PLUG, MANIFOLD 2.00 W/ HOLE
4	**530097**	1	MANIFOLD TEE, 2"
5	**530393**	1	MANIFOLD SWEEP, 2" STD X 2" STD 90~
6	**540001**	2	CLAMP, 2.00 STD WORM SCREW
7	**540002**	1	CLAMP, FP WORM SCREW, 2.00
8	**540053**	1	P-CLAMP, 4" W/3/8" HOLE
9	**596213M**	1	NUT, HEX 3/8-16 MAGNI
10	**596250M**	1	LOCKWASHER, 3/8 MAGNI
11	**596592M**	1	BOLT, CARRIAGE 3/8-16 X 1 MAGNI
12	**632097**	1	KIT, PRESSURE TRANSDUCER

Eductor Option – 15 Gal.

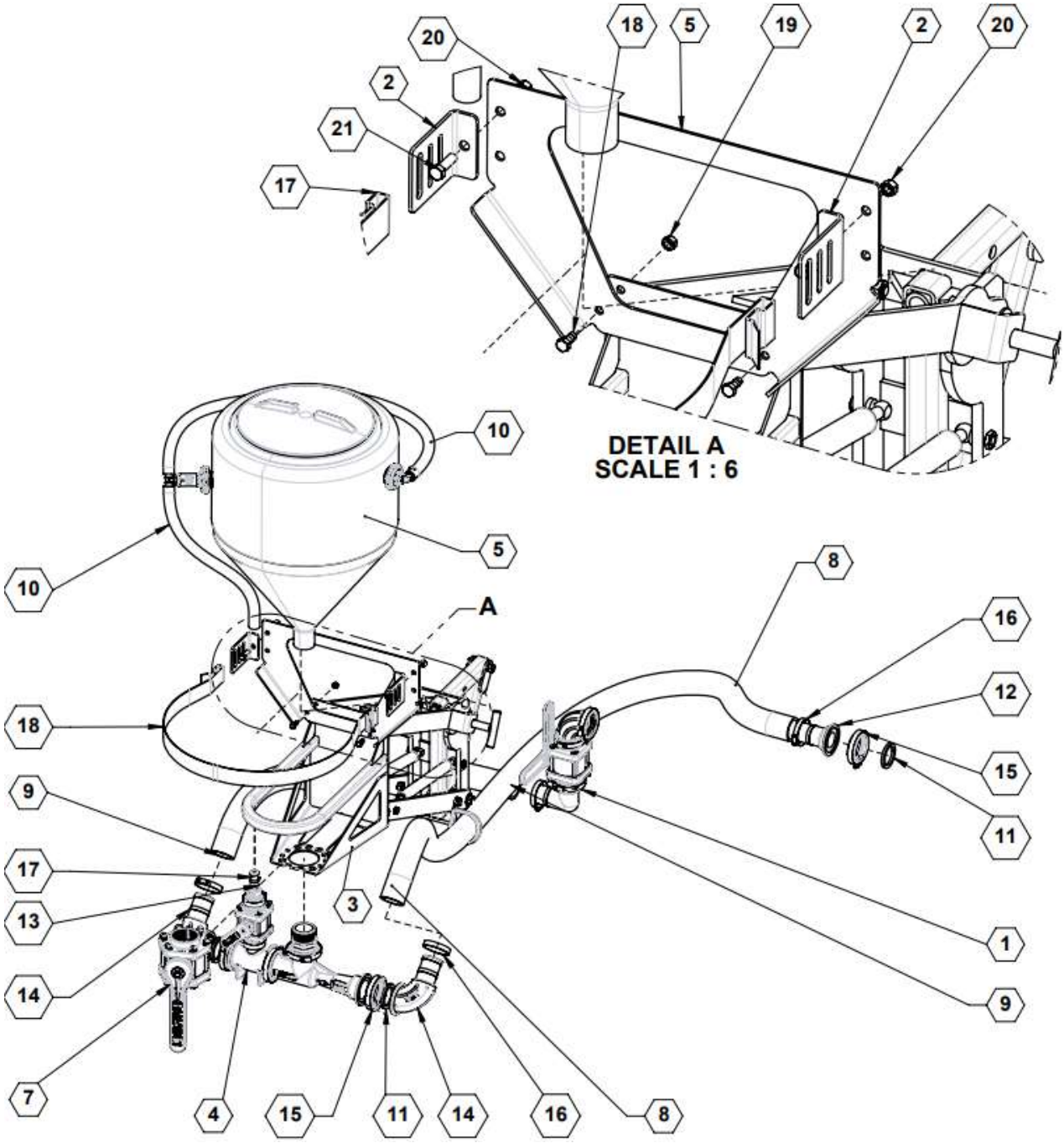

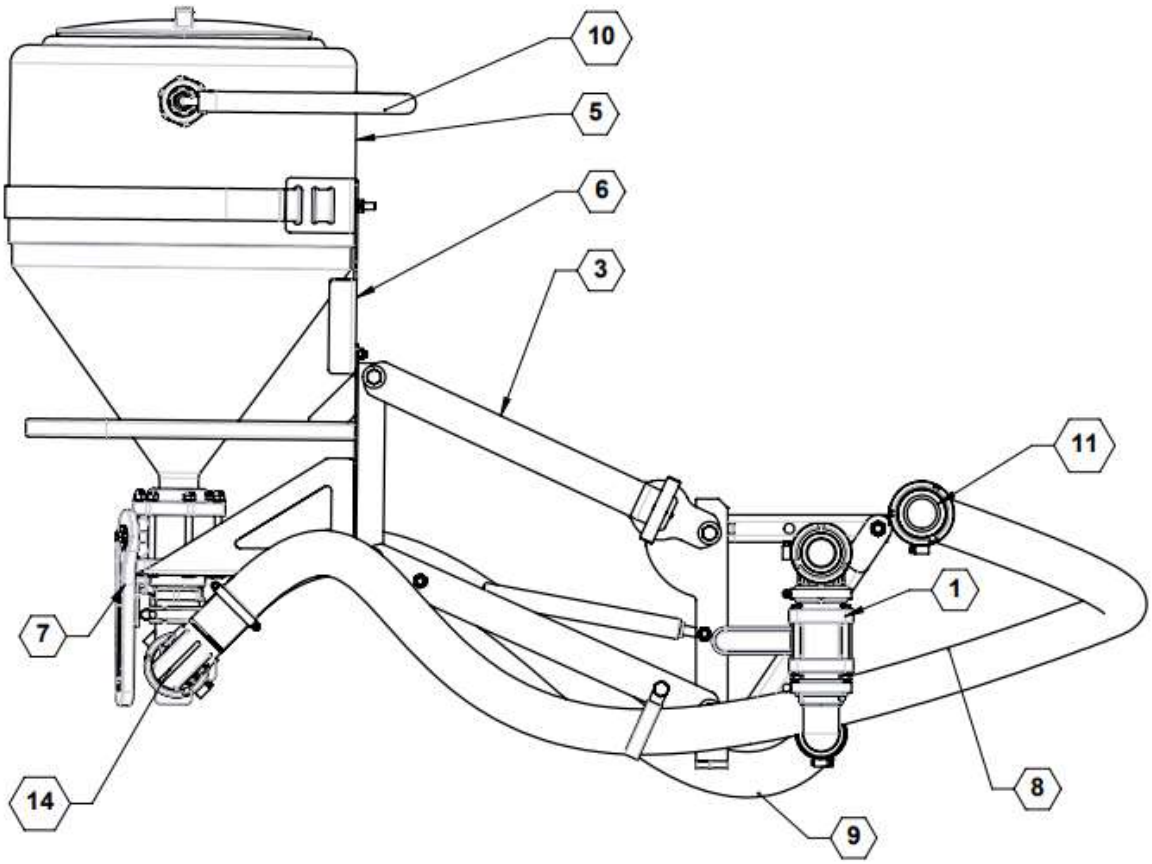
10
5
6
3
11
1
7
14
8
9

Parts List 34400: Eductor Option – 15 Gal.

ITEM	PART NO.	QTY.	DESCRIPTION
1	90SARAE2	1	ASSEMBLY, BANK END TAKEOFF
2	3071	2	BUCKLE, 2" STRAP
3	34300	1	ASSEMBLY, EDUCTOR LIFT
4	36195	1	ASSEMBLY, EDUCTOR BASE 2.0 FPT
5	36196	1	ASSEMBLY, EDUCTOR WITH FITTINGS
6	36197	1	PLATE, EDUCTOR STRAP BRACKET
7	500011	1	VALVE, 2IN FPT X 2IN PORT POLY
8	510017	8	(FT) HOSE, 2.0" EPDM
9	510017	4	(FT) HOSE, 2.0" EPDM
10	510019	6	(FT) HOSE, 1/2" EPDM
11	530019	3	GASKET, 2.00 EPDM
12	530103	1	FITTING, 2.00 FP FLANGE X 2.00 HB, POLY
13	530299	1	HOSE BARB, 1/2" MPT X 3/4" BARB
14	530334	2	2" FP PLANGE X HOSE SHK SWEEP
15	540002	3	CLAMP, FP WORM SCREW, 2.00
16	540018	3	CLAMP, 2-3/4" SS
17	540032	1	HOSE CLAMP, 5/16 #5 SS
18	580004	4.6	(FT) STRAP, 1.75IN NYLON WEBBING
19	596114M	2	BOLT, HH 5/16-18X3/4 GR5 MAGNI
20	596236M	2	NUT, CENTERLOCK, 5/16-18 MAGNI
21	596237M	2	NUT, CENTERLOCK 3/8-16 MAGNI
22	596635M	2	BOLT, HH 3/8-16 x 1-1/4 MAGNI

Distribution Bank End Takeoff

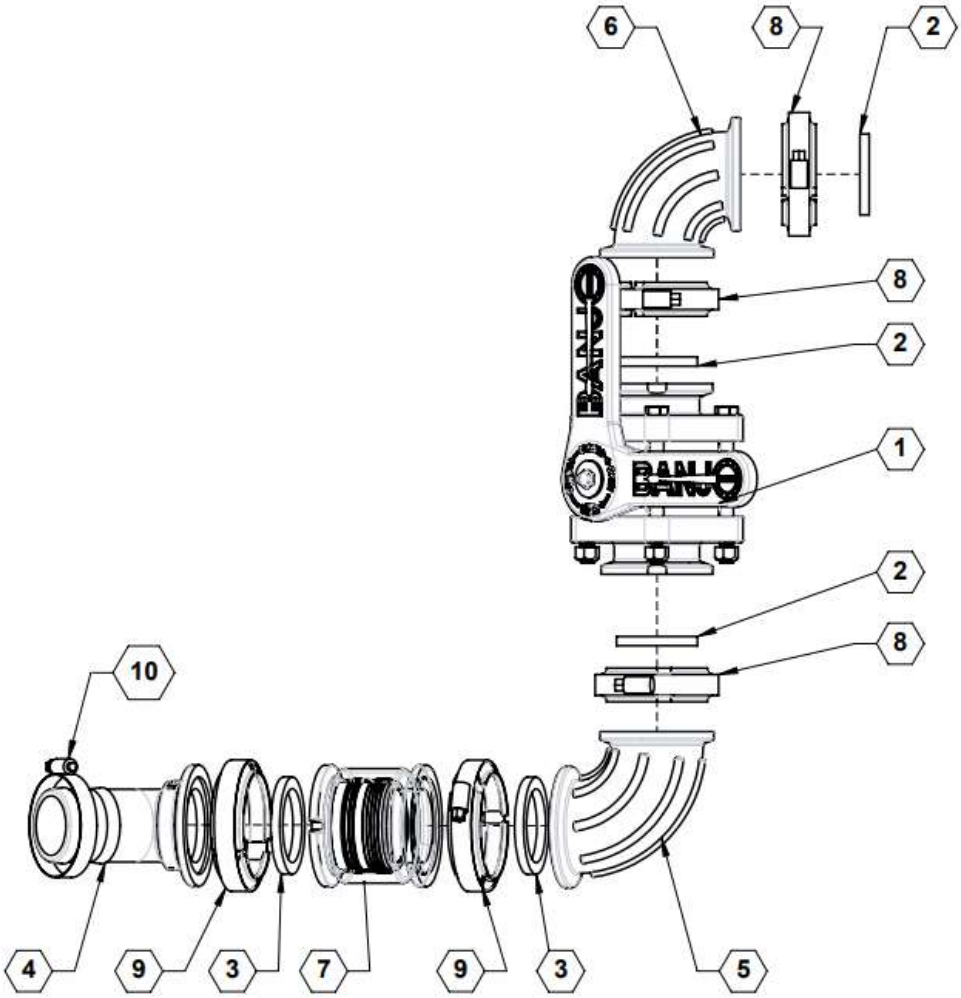

Parts List 90SARAE2: Distribution Bank End Takeoff

ITEM	PART NO.	QTY.	DESCRIPTION
1	**500039**	1	VALVE, MANIFOLD, 2.00 STD. PORT, 4 BOLT, POLY
2	**530014**	3	GASKET, 1.500 EPDM
3	**530019**	2	GASKET, 2.00 EPDM
4	**530354**	1	ELBOW 45, 2.00 MANIFOLD X 2.00 HB
5	**530388**	1	MANIFOLD SWEEP, 2" FP X 2" STD
6	**530393**	1	MANIFOLD SWEEP, 2" STD X 2" STD 90~
7	**530425**	1	SWIVEL, 2.0 FULL PORT FLANGE
8	**540001**	3	CLAMP, 2.00 STD WORM SCREW
9	**540002**	2	CLAMP, FP WORM SCREW, 2.00
10	**540018**	1	CLAMP, 2-3/4" SS

Eductor Base, 2.0 FPT

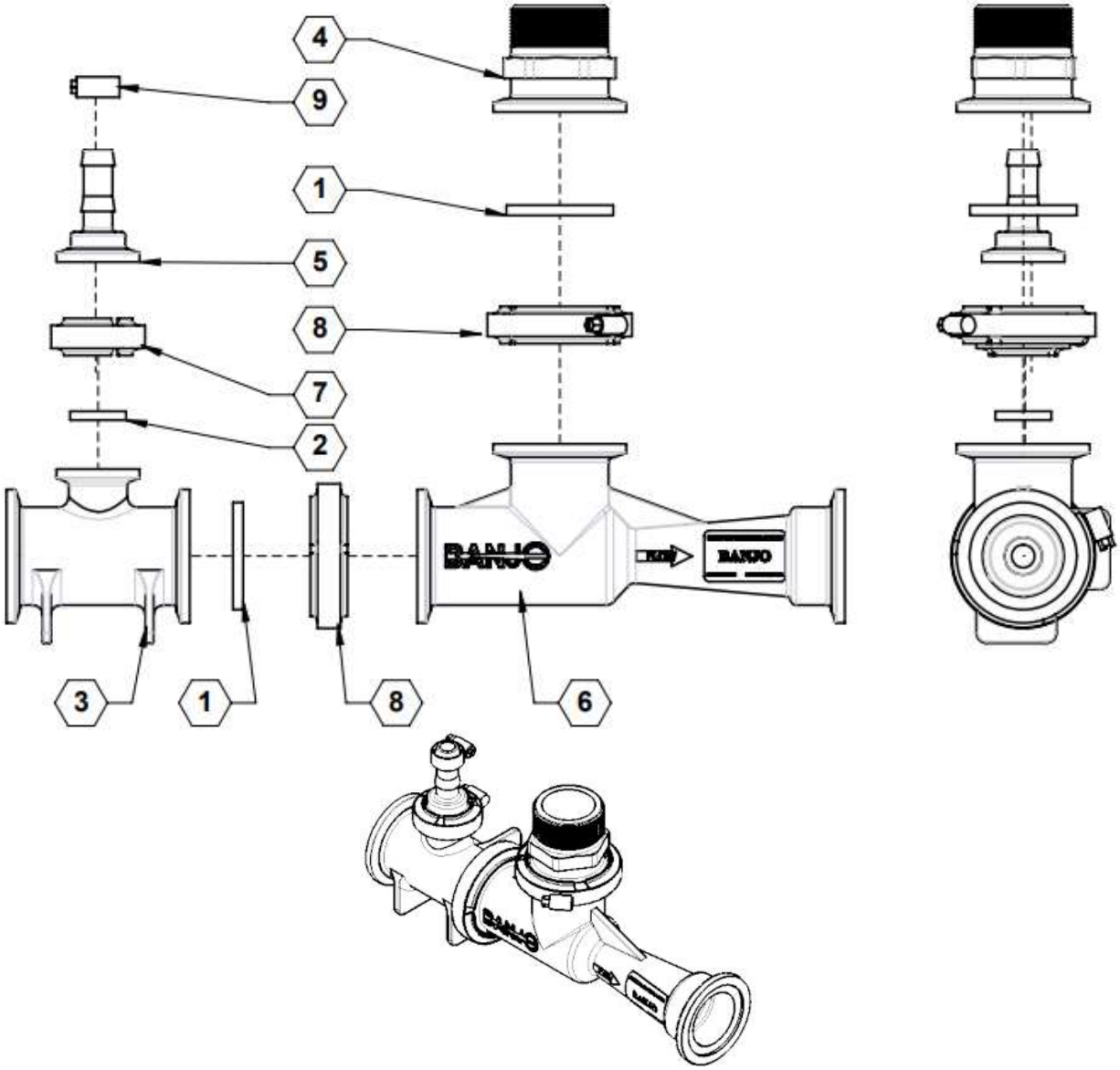

Parts List 36195: Eductor Base, 2.0 FPT

ITEM	PART NO.	QTY.	DESCRIPTION
1	**500005**	1	VALVE, 1" FP WITH C-FLANGE
2	**530019**	2	GASKET, 2.00 EPDM
3	**530068**	2	GASKET, 1.00 EPDM
4	**530099**	1	MANIFOLD, 2" FP X 1" FLANGE TEE
5	**530108**	1	2" MANIFOLD X 2" FP MPT
6	**530265**	1	FITTING, 1.00 MANIFOLD X .50 FPT
7	**530551**	1	2IN FP VENTURI TEE W-3/4IN
8	**540000**	2	CLAMP, WORM SCREW, 1.00
9	**540002**	2	CLAMP, FP WORM SCREW, 2.00

Eductor Option – None

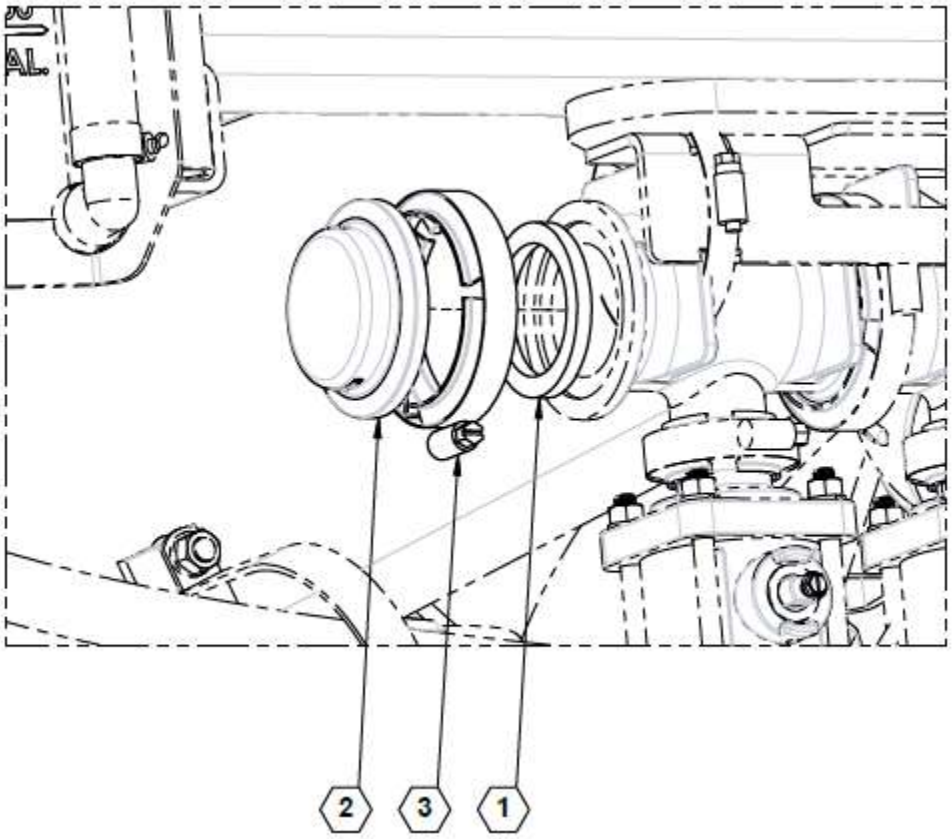

Parts List 36687: Eductor Option – None

ITEM	PART NO.	QTY.	DESCRIPTION
1	**530019**	1	GASKET, 2.00 EPDM
2	**530109**	1	2" FULL PORT FLANGE CAP
3	**540002**	1	CLAMP, FP WORM SCREW, 2.00

See also: Distribution, Agitation & Rinse

Main Tank Discharge

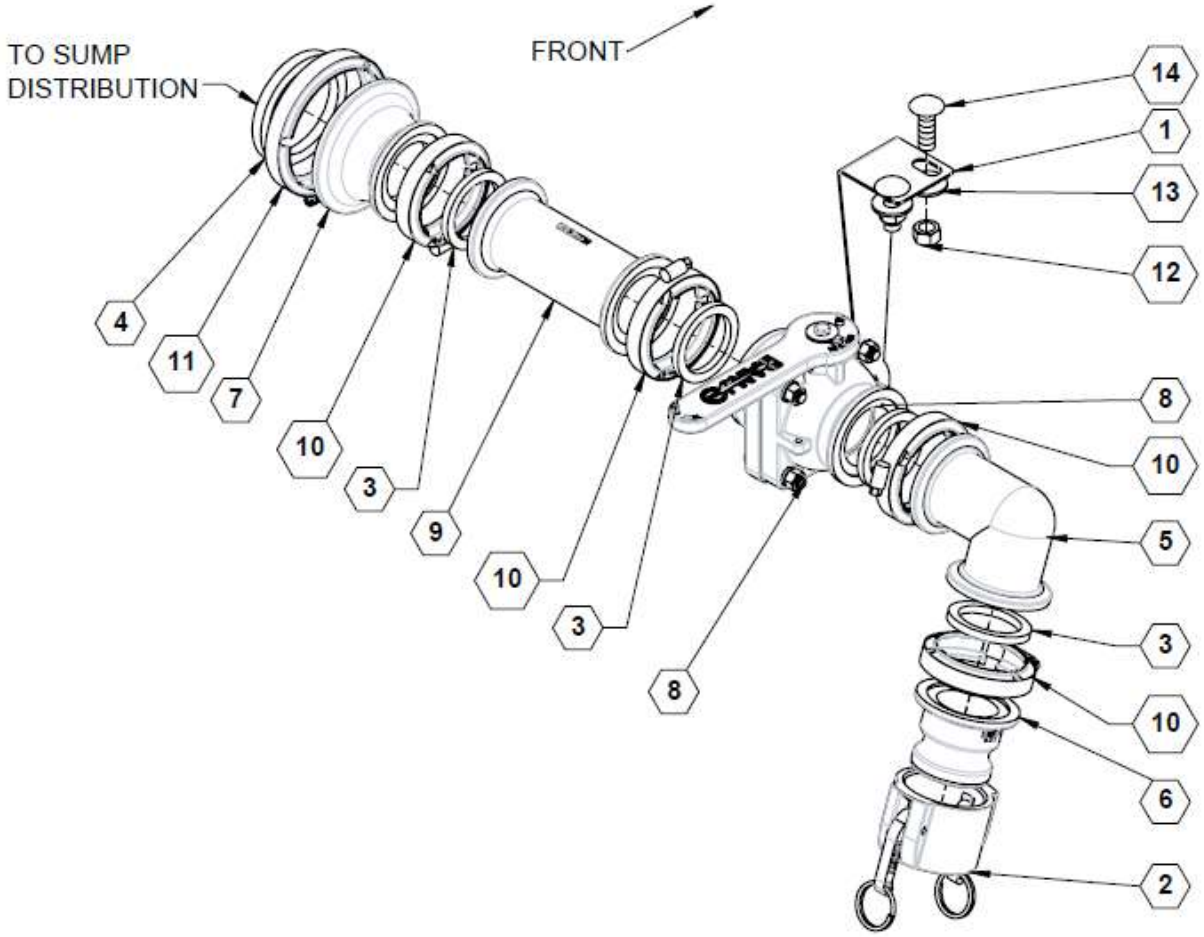

Parts List 36601: Main Tank Discharge

ITEM	PART NO.	QTY.	DESCRIPTION
1	**36198**	1	PLATE, BOLTED DISCHARGE BRACKET
2	**530017**	1	CAP, 2"
3	**530019**	4	GASKET, 2.00 EPDM
4	**530024**	1	GASKET, 3" EPDM
5	**530106**	1	MANIFOLD COUPLING 90° 2" FP
6	**530271**	1	ADAPTER, 2" FP X 2" MALE
7	**530316**	1	MANIFOLD REDUCER 3" X 2" CPLR
8	**530327**	1	MANIFOLD, VALVE, 2" FP STUBBY
9	**530454**	1	2" X 2" LONG PORT MANIFOLD
10	**540002**	4	CLAMP, FP WORM SCREW, 2.00
11	**540003**	1	CLAMP, 3INCH WORM SCREW
12	**596239M**	3	NUT, CENTERLOCK, 1/2-13 MAGNI
13	**596260M**	3	WASHER, FLAT 1/2 MAGNI
14	**596620M**	3	CB, 1/2 X 1-1/2 GR5 MAGNI

Hand Wash Hose & Fittings

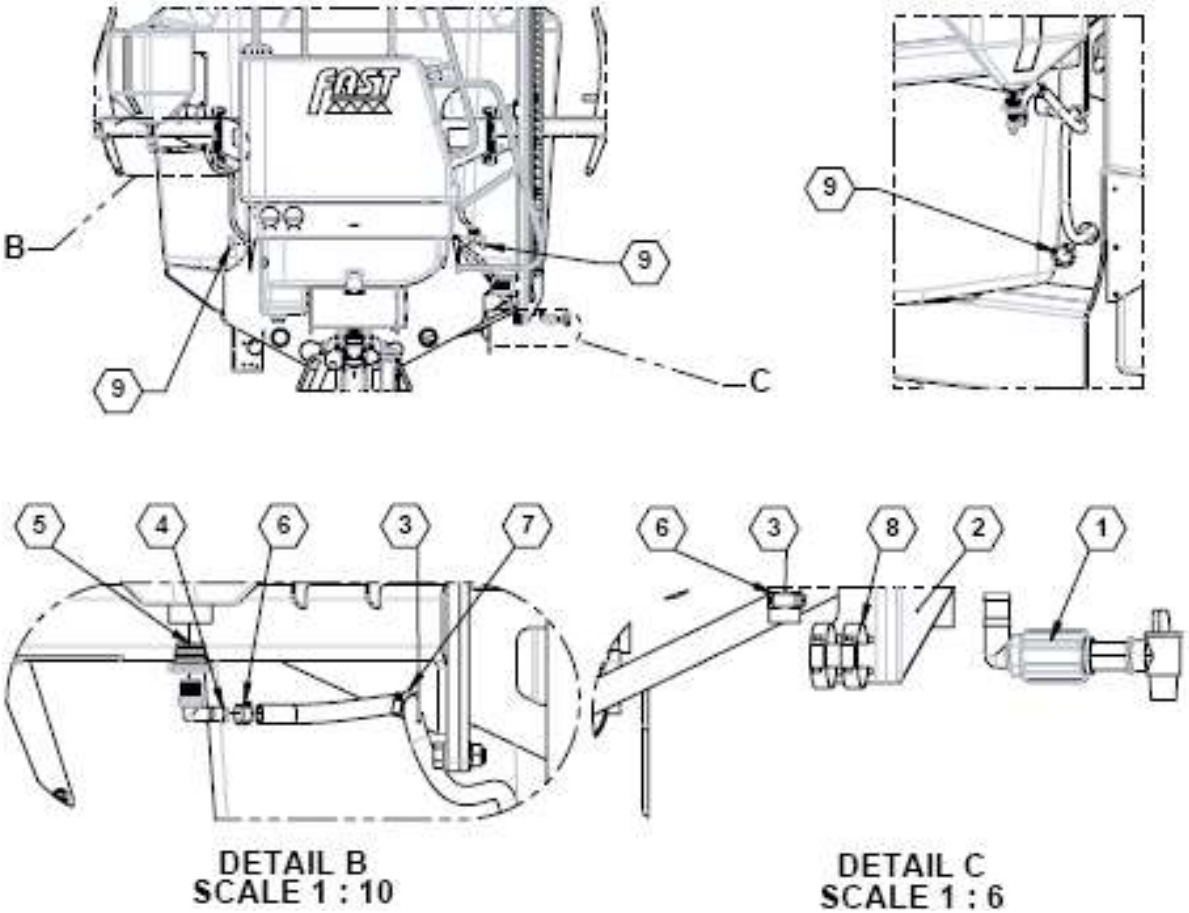

Parts List 36601: Hand Wash Hose & Fittings

ITEM	PART NO.	QTY.	DESCRIPTION
1	**90SARNSEFAUCET90**	1	SUB-ASSY, RINSE FAUCET, 90 ELBOW 3/4
2	**36629**	1	ASSY, SIGHT GAUGE S32
	36820		ASSY, SIGHT GAUGE S32
3	**510006**	9	(FT) HOSE, 0.75IN CLEAR
4	**530040**	1	HOSE SHANK, 3/4" MPT X 3/4" HB 90~
5	**530143**	1	BUSHING, REDUCER 1-1/4 X 3/4
6	**540013**	2	HOSE CLAMP, SS .75 #12
7	**540014**	1	HOSE CLAMP, SS 1.00 #16
8	**540016**	2	CLAMP, SS 1.500 #24
9	**540119**	2	GROMMET, 1.86ID, PUSH LOCK, NYLON

See also: Main, Rinse, and Handwash Tank

Hand Wash Rinse Faucet

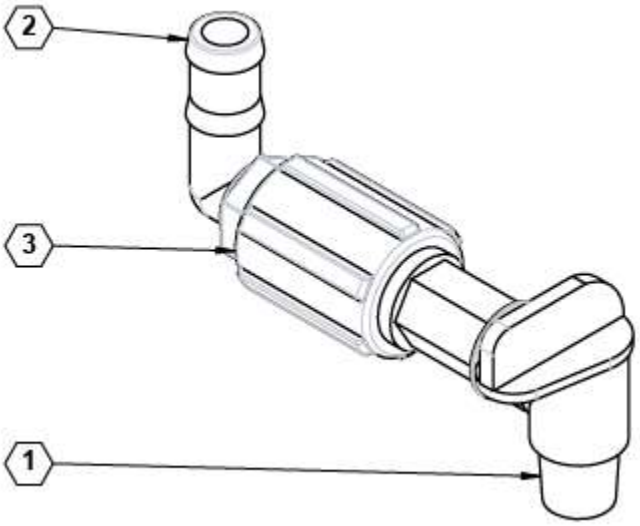

Parts List 90SARNSEFAUCET90: Hand Wash Rinse Faucet

ITEM	PART NO.	QTY.	DESCRIPTION
1	**510022**	1	FAUCET, 3/4" FLO-RITE, CLEAR
2	**530040**	1	FITTING, 3/4" MPT X 3/4" HB 90 ELBOW
3	**530235**	1	COUPLER, 3/4" POLY PIPE

Sight Gauge (for Truss Boom), Manual – 3200 Gal.

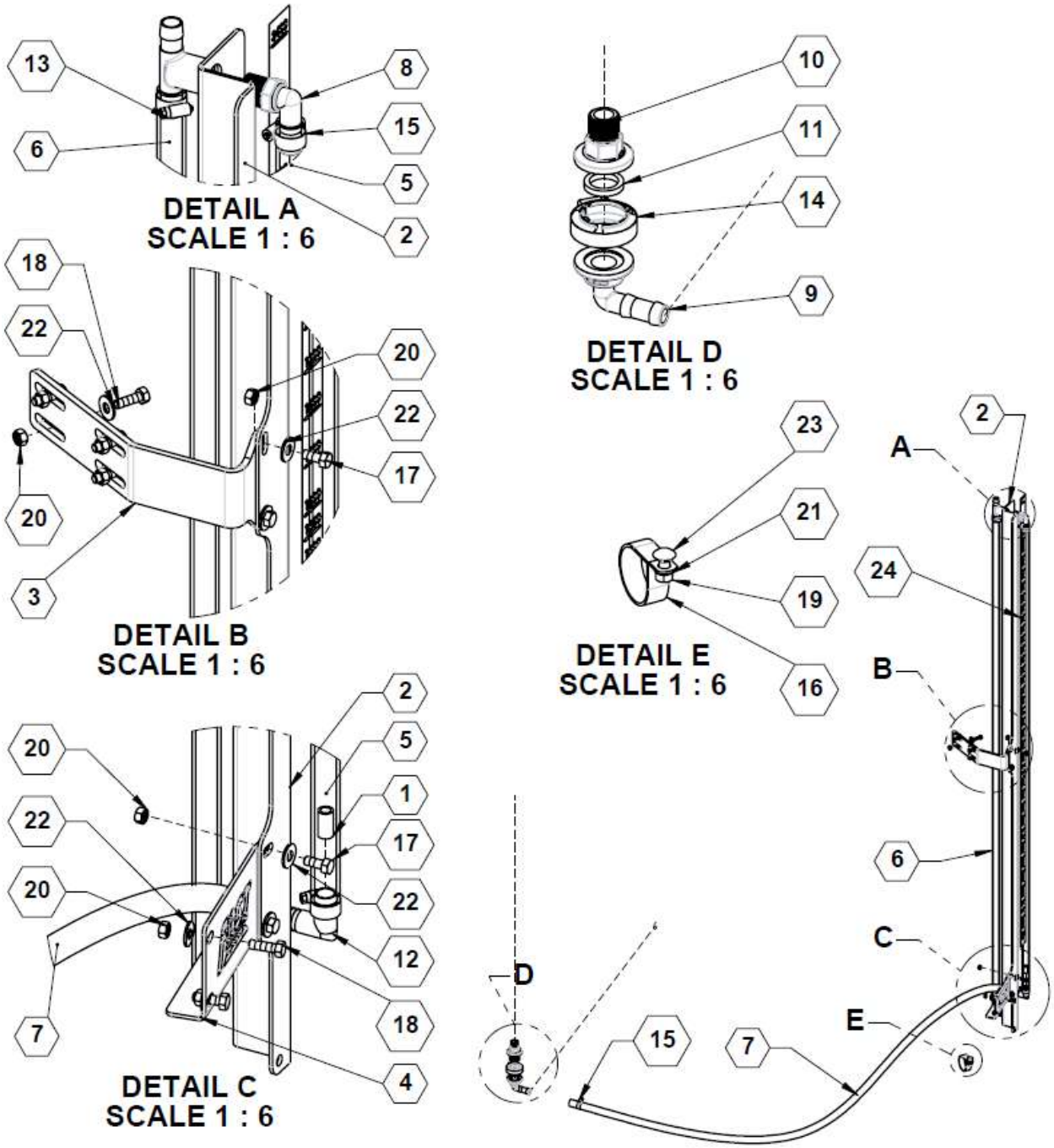

Parts List 36629: Sight Gauge (for Truss Boom), Manual – 3200 Gal.

ITEM	PART NO.	QTY.	DESCRIPTION
1	**36296**	1	TUBE, SIGHT GAUGE VISUAL RETAINER
2	**36631**	1	PLATE, GAUGE VERTICAL
3	**36678**	1	PLATE, GAUGE TOP
4	**36679**	1	PLATE, GAUGE BOTTOM SIGN
5	**510006**	76	(IN) HOSE VINYL CLEAR 3/4"
6	**510006**	80	(IN) HOSE VINYL CLEAR 3/4"
7	**510019**	75	(IN) HOSE 3/4" EPDM
8	**530040**	1	HOSE SHANK, 3/4" MPT X 3/4" HB 90~
9	**530060**	1	ELBOW, 1" FLANGE X 3/4" HB 90~
10	**530062**	1	FLANGE, 1" X 3/4" MALE THREAD
11	**530068**	1	GASKET, 1.00 EPDM
12	**530214**	1	HOSE BARB ELBOW, 3/4" X 3/4"
13	**530220**	1	TEE, .75 FPT X .75 HB X .75 HB
14	**540000**	1	CLAMP, WORM SCREW, 1.00
15	**540013**	5	HOSE CLAMP, SS .75 #12
16	**540051**	1	P-CLAMP, 2" W/3/8" HOLE
17	**596114M**	4	BOLT, HH 5/16-18X3/4 GR5 MAGNI
18	**596115M**	6	BOLT, HH 5/16-18 X 1 GR5 MAGNI
19	**596213M**	1	NUT, HEX 3/8-16 MAGNI
20	**596236M**	10	NUT, CENTERLOCK, 5/16-18 MAGNI
21	**596250M**	1	LOCKWASHER, 3/8 MAGNI
22	**596257M**	10	WASHER, FLAT 5/16 USS MAGNI
23	**596592M**	1	BOLT, CARRIAGE 3/8-16 X 1 MAGNI
24	**800371**	1	DECAL, 3200-GAL LEVEL

Sight Gauge (for Camera-Ready Boom), Manual – 3200 Gal.

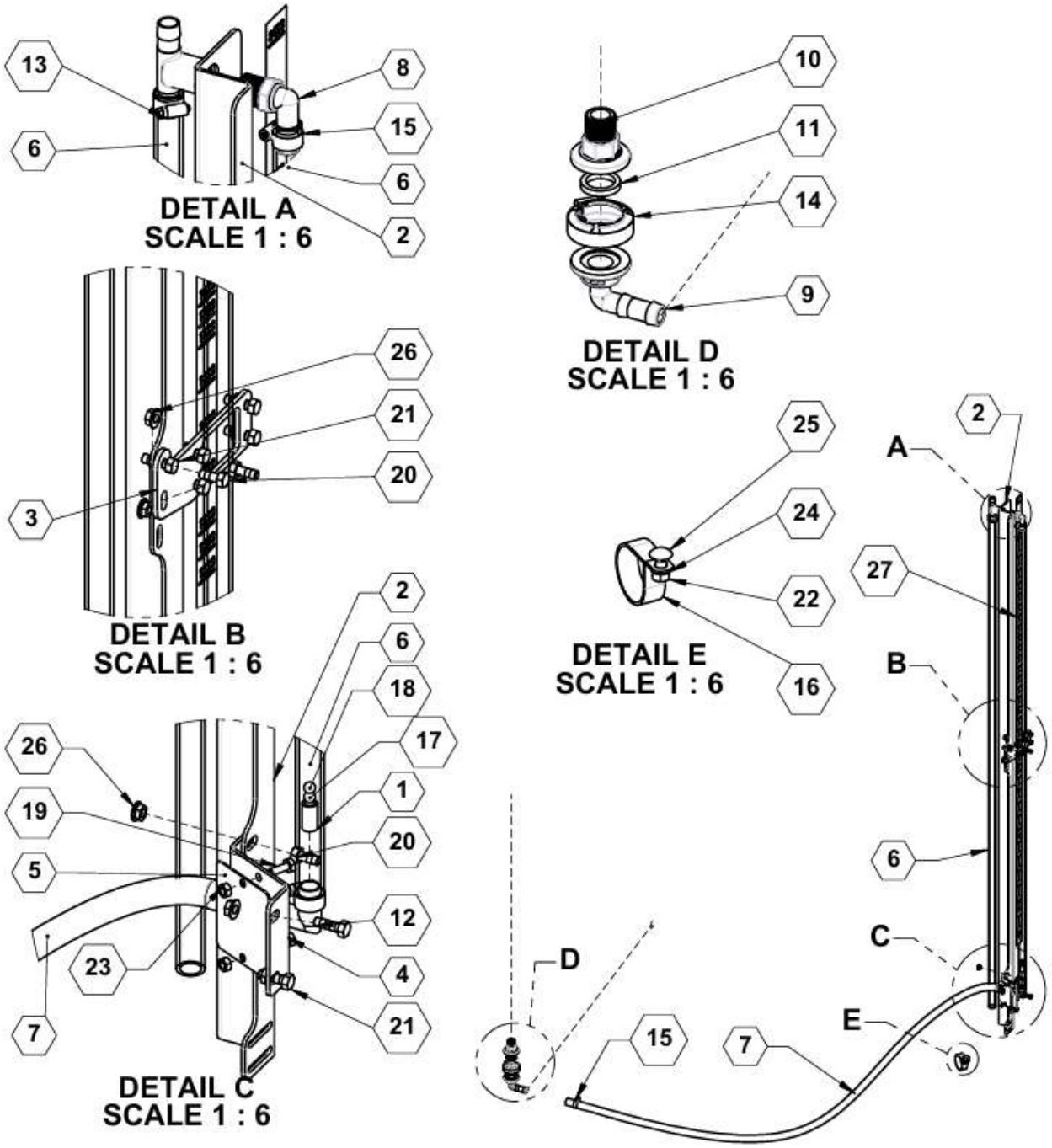

Parts List 36820: Sight Gauge (for Camera-Ready Boom), Manual – 3200 Gal.

ITEM	PART NO.	QTY.	DESCRIPTION
1	**36296**	1	TUBE, SIGHT GAUGE VISUAL RETAINER
2	**36631**	1	PLATE, GAUGE VERTICAL
3	**36836**	1	PLATE, UPPER GAUGE MOUNT
4	**36837**	1	PLATE, LOWER GAUGE MOUNT
5	**36889**	1	PLATE, LOGO BACKING
6	**510006**	156	(IN) HOSE VINYL CLEAR 3/4"
7	**510019**	75	(IN) HOSE 3/4" EPDM
8	**530040**	1	HOSE SHANK, 3/4" MPT X 3/4" HB 90~
9	**530060**	1	ELBOW, 1" FLANGE X 3/4" HB 90~
10	**530062**	1	FLANGE, 1" X 3/4" MALE THREAD
11	**530068**	1	GASKET, 1.00 EPDM
12	**530214**	1	HOSE BARB ELBOW, 3/4" X 3/4"
13	**530220**	1	TEE, .75 FPT X .75 HB X .75 HB
14	**540000**	1	CLAMP, WORM SCREW, 1.00
15	**540013**	5	HOSE CLAMP, SS .75 #12
16	**540051**	1	P-CLAMP, 2" W/3/8" HOLE
17	**590470GRN**	1	BALL, 10MM INDICATOR, RESIN
18	**590470RED**	1	BALL, 10MM INDICATOR, RESIN
19	**596101M**	2	BOLT, HH 1/4-20 X 3/4 GR5 MAGNI
20	**596114M**	4	BOLT, HH 5/16-18X3/4 GR5 MAGNI
21	**596115M**	7	BOLT, HH 5/16-18 X 1 GR5 MAGNI
22	**596213M**	1	NUT, HEX 3/8-16 MAGNI
23	**596235M**	2	NUT, CENTERLOCK, 1/4-20 MAGNI
24	**596250M**	1	LOCKWASHER, 3/8 MAGNI
25	**596592M**	1	BOLT, CARRIAGE 3/8-16 X 1 MAGNI
26	**596768M**	11	NUT, HEX FLANGE 5/16-18 MAGNI
27	**800371**	1	DECAL, 3200 GAL LEVEL

Sight Gauge, Electric, Mueller

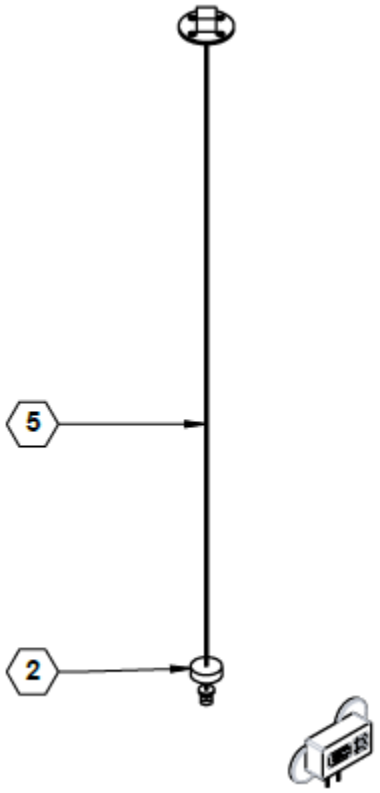

Parts List 99SGAE3200FS: Sight Gauge, Electric, Mueller

ITEM	PART NO.	QTY.	DESCRIPTION
1	**959**	1	MANUAL, ELECTRONIC SIGHT GAUGE
2	**560067**	1	MAGNET, 3-1/8 OD, 7/32 MOUNT
3	**632150**	1	HARNESS, POWER, SIGHT GAUGE
5	**632224**	1	SENSOR, ELEC. SIGHT 3200

Sight Gauge, Electric, Rota

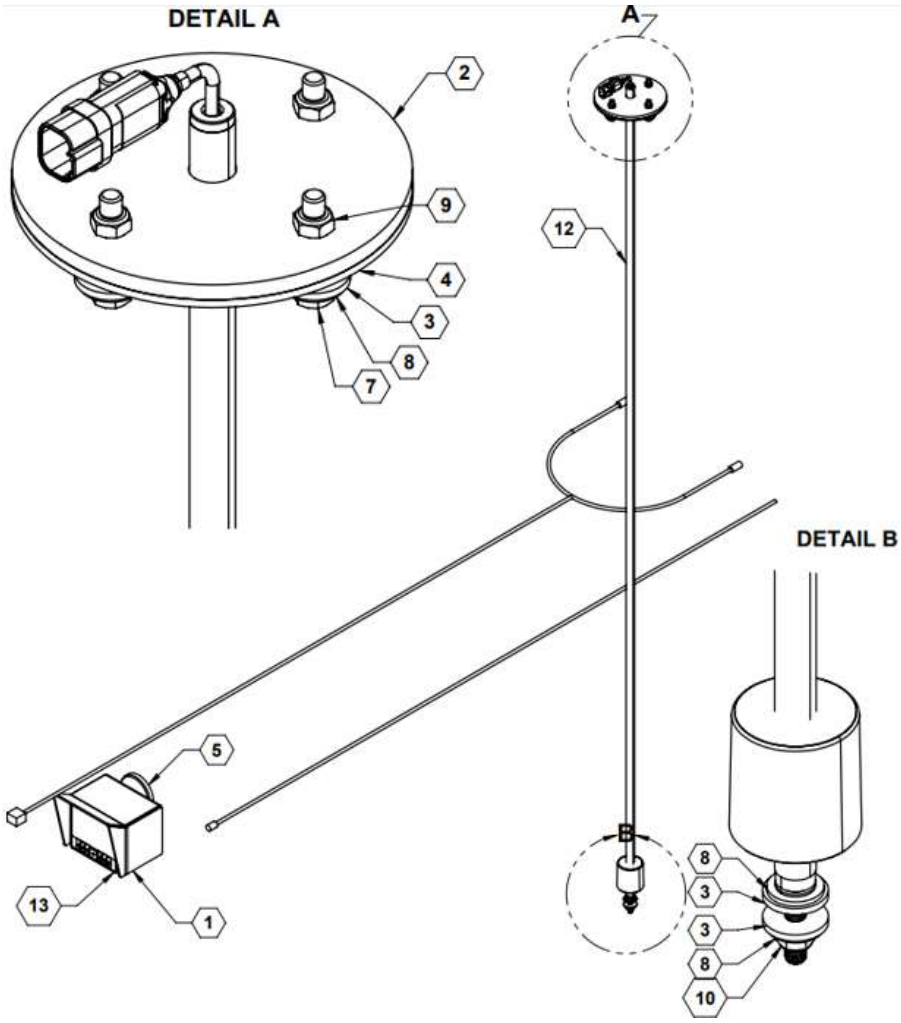

Parts List 37976: Sight Gauge, Electric, Rota

ITEM	PART NO.	QTY.	DESCRIPTION
1	**37973**	1	WELDMENT, ROTA TANK SENSOR HOUSING
2	**37977**	1	PLATE, FLANGE, ROTA SENSOR
3	**530520**	6	GASKET, 5/16 BOLT"
4	**530521**	1	GASKET, COVER
5	**560067**	2	MAGNET, 3-1/8 OD, 7/32 MOUNT
6	**590274**	2	NUT NYLON 10-24 SS18-8
7	**590424**	4	BOLT, HH 5/16-18X1-1/2 FULL THREAD 304 SS
8	**590425**	6	WASHER, FLAT 5/16 SS
9	**590426**	4	NUT, NYLOCK, THIN, 5/16-18, 316 SS
10	**590477**	1	NUT, NYLOCK, M8-1.25, SS
11	**590479**	2	SCREW PHIL 10-24 X 3/4 SS18-8
12	**632238**	1	SENSOR, ROTA, 3200 TANK LEVEL
13	**632247**	1	KIT, ELECT. SIGHT GAUGE DISPLAY

PRODUCT ELECTRICAL COMP.S

3-Way Electric Selector Valve

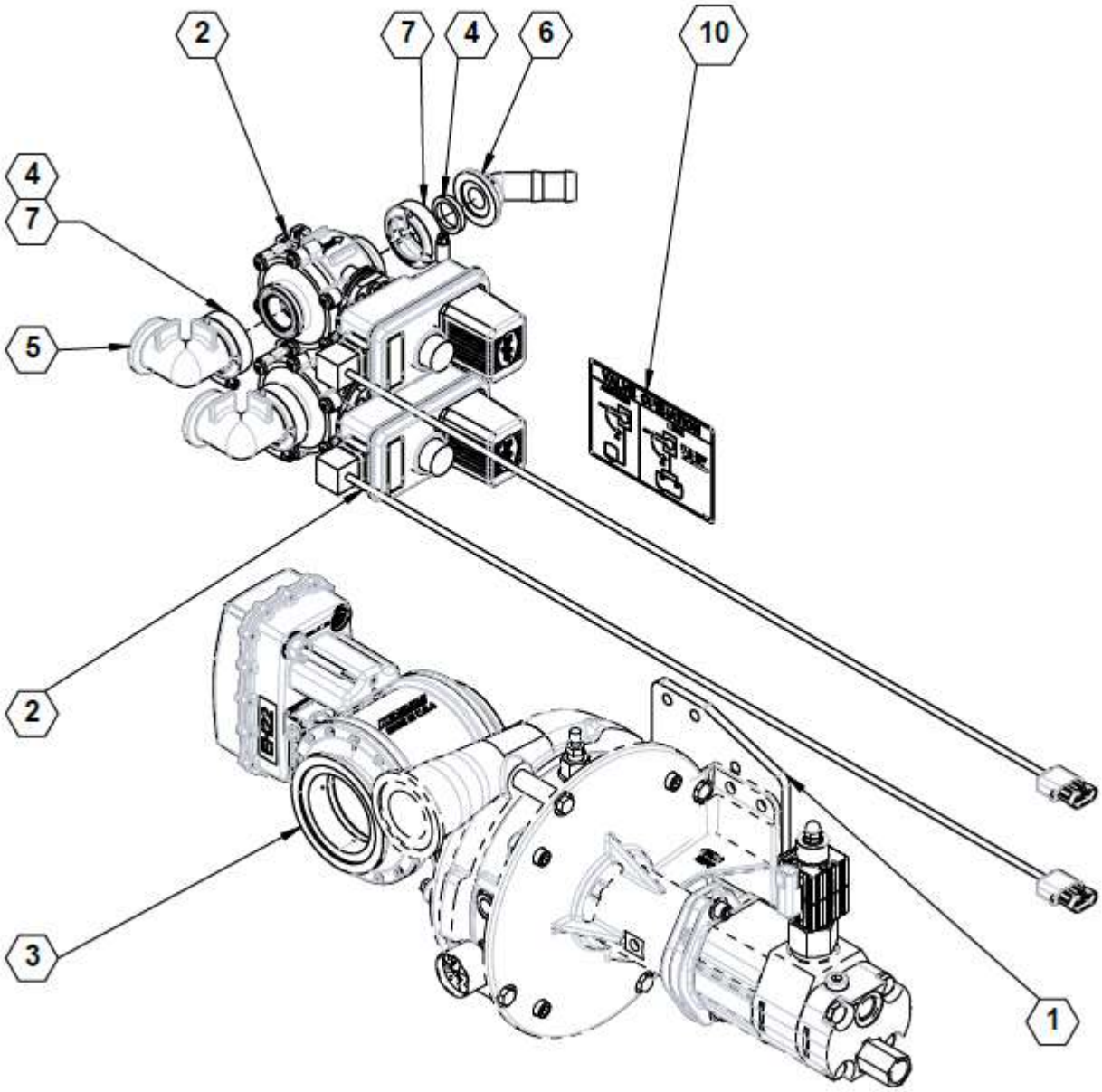

Parts List 99FSEVO: 3-Way Electric Selector Valve

ITEM	PART NO.	QTY.	DESCRIPTION
1	**18305**	1	PLATE, ADAPTER, ACE OASIS PUMP
2	**500064**	2	VALVE, 356 SERIES ON/OFF ELEC. AGITATION
3	**500080**	1	VALVE, 3" 3-WAY ACTUATED
4	**530068**	4	GASKET, 1.00 EPDM
5	**530362**	2	FITTING, 1" MANIFOLD 90° ELBOW
6	**530426**	2	ELBOW 45, 1.00 FLANGE X 1.00 HB
7	**540000**	4	CLAMP, WORM SCREW, 1.00
8	**632155**	1	CAB BOX, ELECTRIC RINSE & AGITATE
9	**632156**	1	HARNESS, ELECTRIC RINSE & AGITATE
10	**800016**	1	DECAL, MAIN TANK VALVE OPERATION

3-Way Electric Selector Schematic (500080)

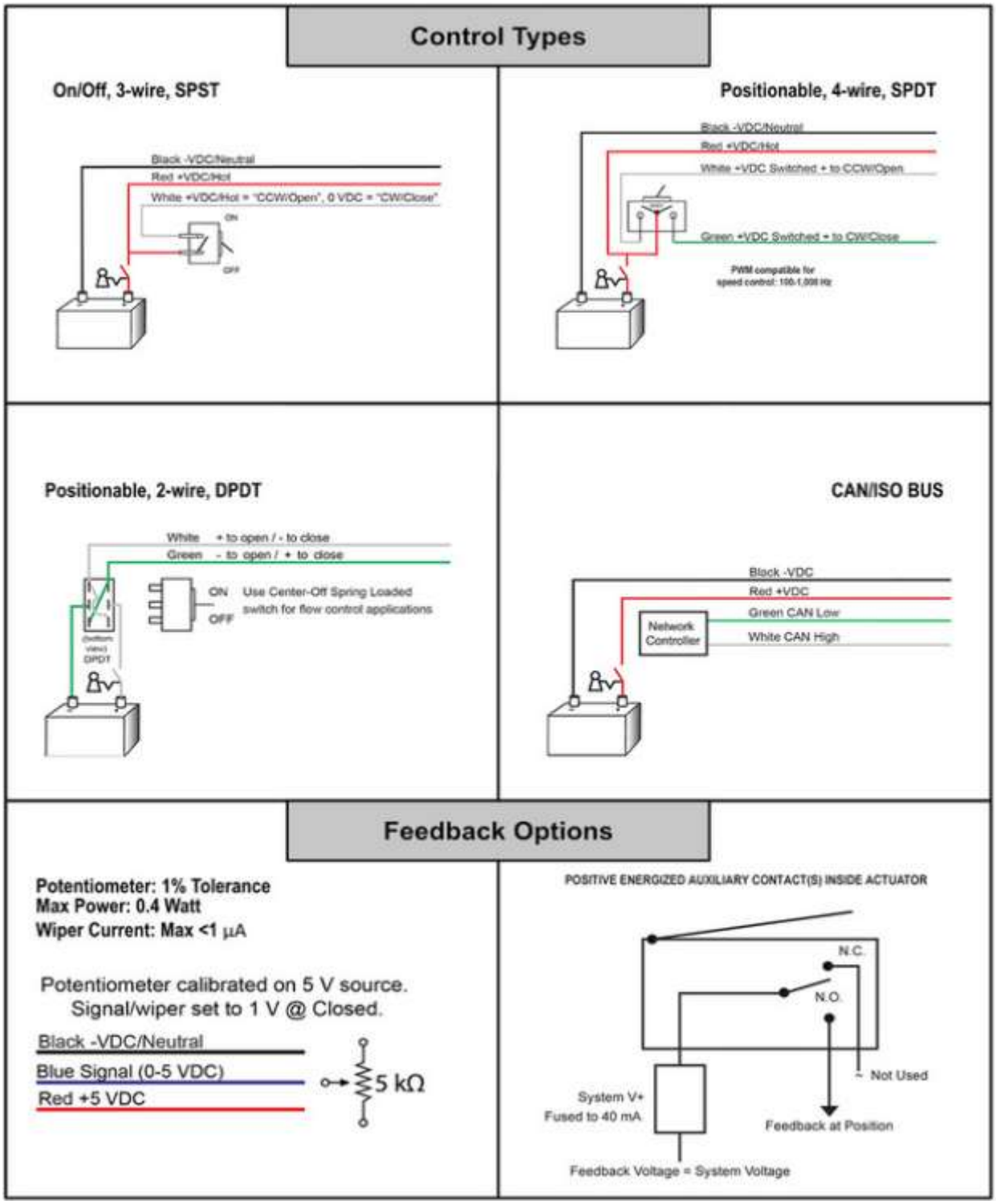

See also: Parts List 500080 and https://view.publitas.com/kzvalve/kzvalve_catalog

Fenceline Nozzles – Single, Display Control

NOTE:
1. FOR USE WITH RAVEN RCM AND JD RC2000

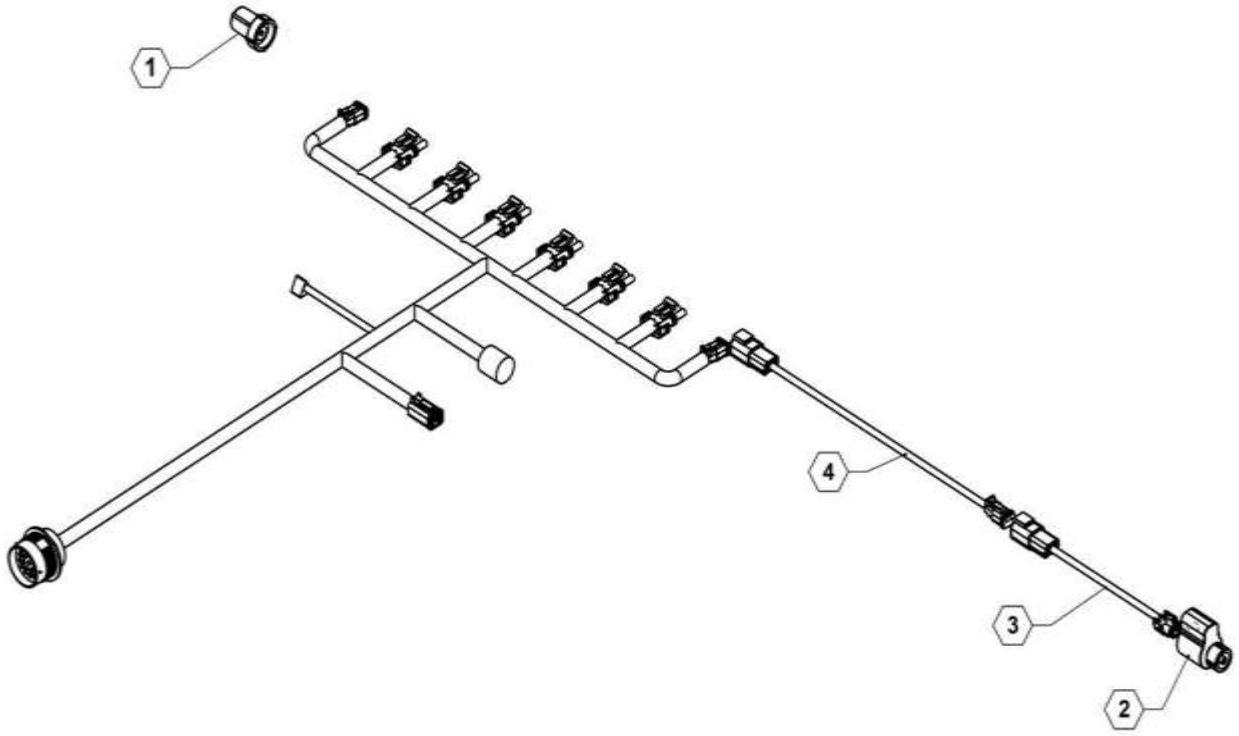

Parts List 27360: Fenceline Nozzles – Single, Display Control

ITEM	PART NO.	QTY.	DESCRIPTION
1	**520037**	1	VALVE, MANUAL CHEMSAVER
2	**520038**	1	VALVE, ELECTRIC CHEMSAVER
3	**632044**	1	FENCEROW ADAPTER CABLE, 6”
4	**632054**	1	FENCEROW CABLE, 55’

Fenceline Nozzles – Single, Toggle Switch Control

NOTE:
1. FOR USE WITH RAVEN 450, JD GREENSTAR & OTHER 16 & 37 PIN CABLING CONTROLLERS

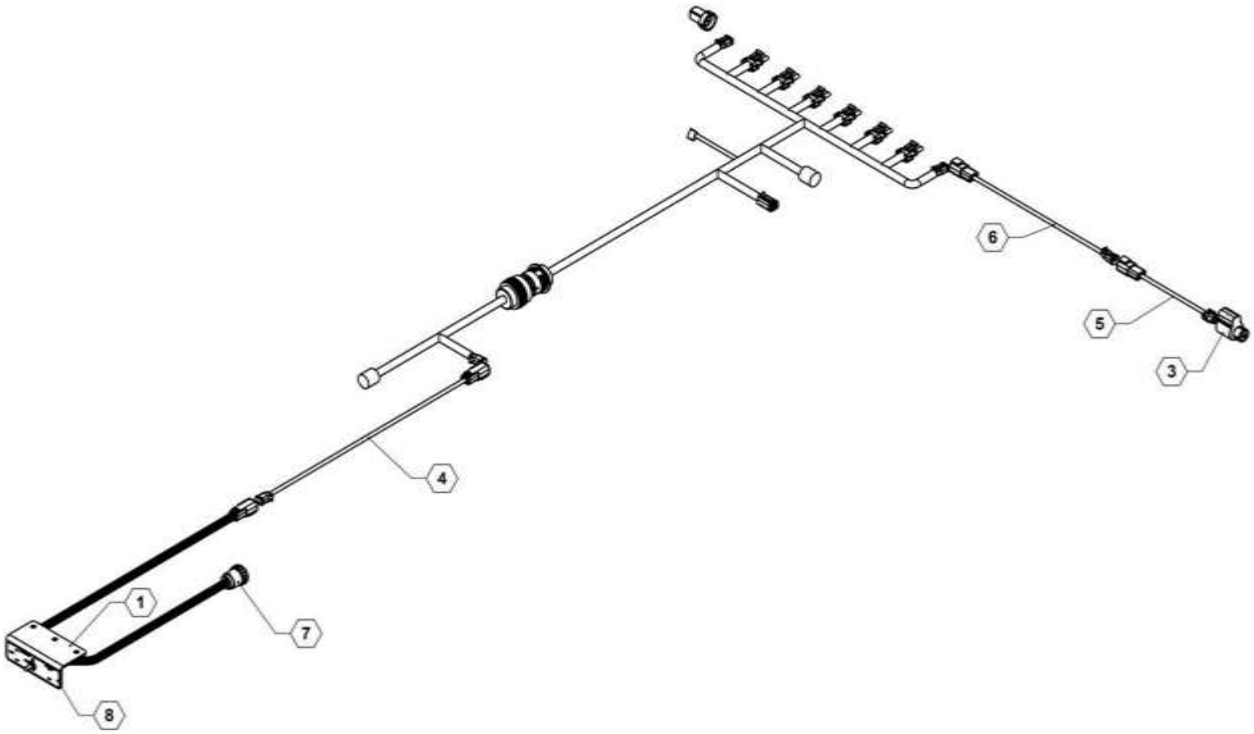

Parts List 27362: Fenceline Nozzles – Single, Toggle Switch Control

ITEM	PART NO.	QTY.	DESCRIPTION
1	**18437**	1	PLATE, MOUNT
2	**520037**	1	VALVE, MANUAL CHEMSAVER
3	**520038**	1	VALVE, ELECTRIC CHEMSAVER
4	**632042**	1	2 PIN DT 40’ CABLE EXTENSION
5	**632044**	1	FENCEROW ADAPTER CABLE 6”
6	**632054**	1	FENCEROW CABLE, 55’
7	**632089**	1	CABLE, SINGLE ELECTRIC FENCELINE NOZZLE
8	**800261**	1	DECAL, FENCELINE & AGITATION

Fenceline Nozzles – Dual, Display Control

NOTE:
1. FOR USE WITH RAVEN RCM AND JD RC2000

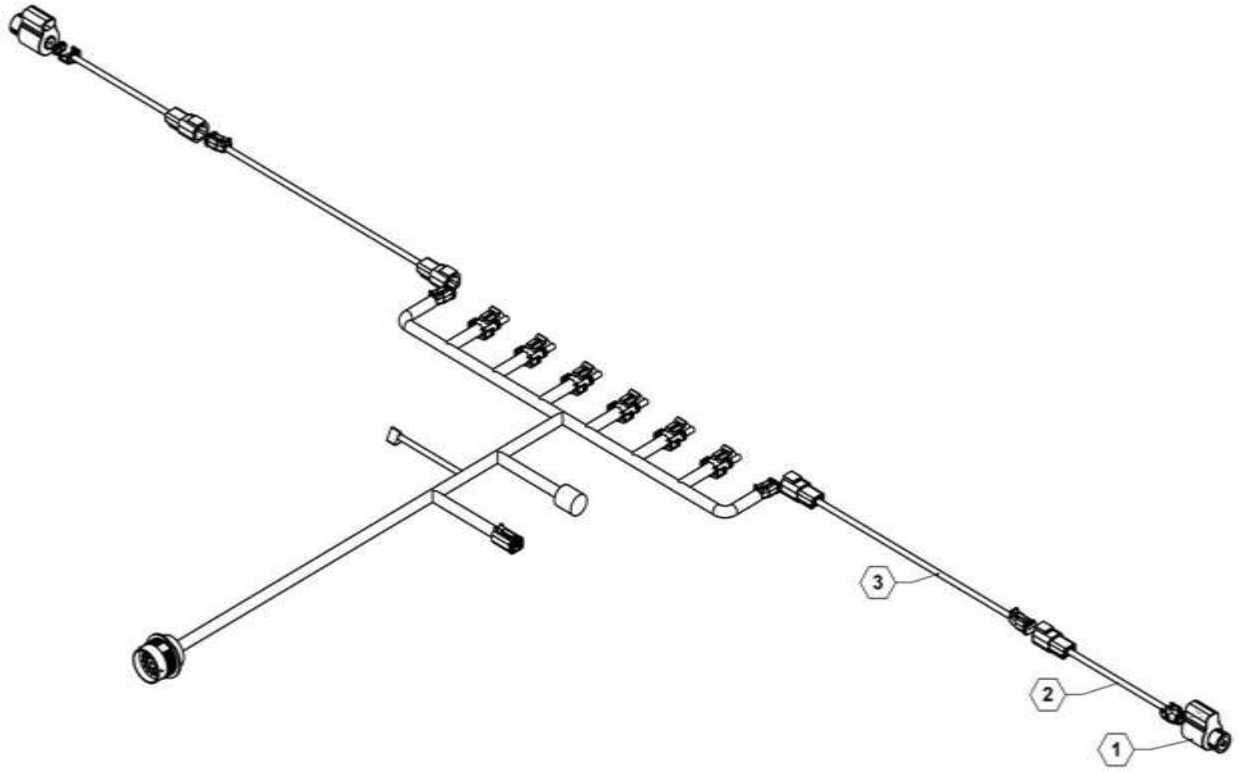

Parts List 27361: Fenceline Nozzles – Dual, Display Control

ITEM	PART NO.	QTY.	DESCRIPTION
1	**520038**	2	VALVE, ELECTRIC CHEMSAVER
2	**632044**	2	FENCEROW ADAPTER CABLE, 6’
3	**632054**	2	FENCEROW CABLE, 55’

Fenceline Nozzles – Dual, Toggle Switch Control

NOTE:
1. FOR USE WITH RAVEN 450, JD GREENSTAR & OTHER 16 & 37 PIN CABLING CONTROLLERS

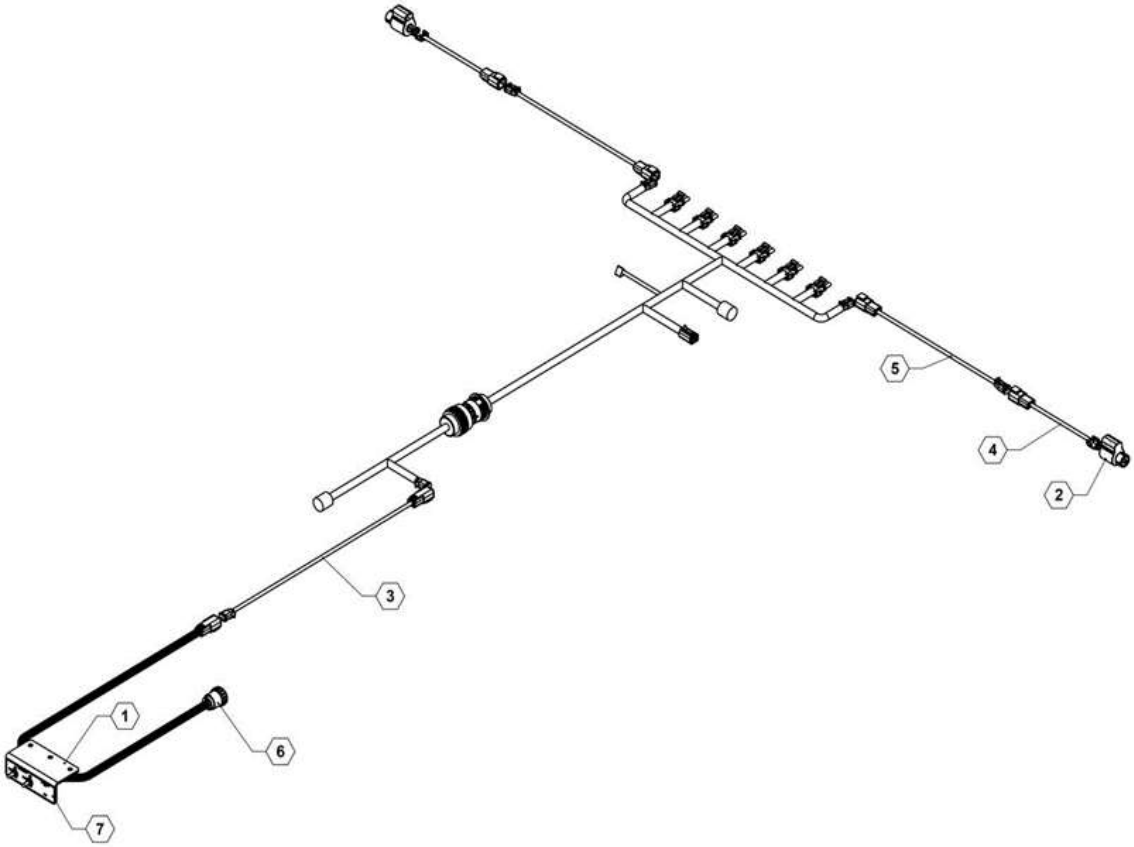

Parts List 27363: Fenceline Nozzles – Dual, Toggle Switch Control

ITEM	PART NO.	QTY.	DESCRIPTION
1	**18437**	1	PLATE, MOUNT
2	**520038**	2	VALVE, ELECTRIC CHEMSAVER
3	**632042**	1	2 PIN DT 40’ CABLE EXTENSION
4	**632044**	2	FENCEROW ADAPTER CABLE, 6”
5	**632054**	2	FENCEROW CABLE, 55’
6	**632088**	1	CABLE, DUAL ELECTRIC FENCELINE NOZZLES
7	**800261**	1	DECAL, FENCELINE & AGITATION

Raven Harnesses & Components

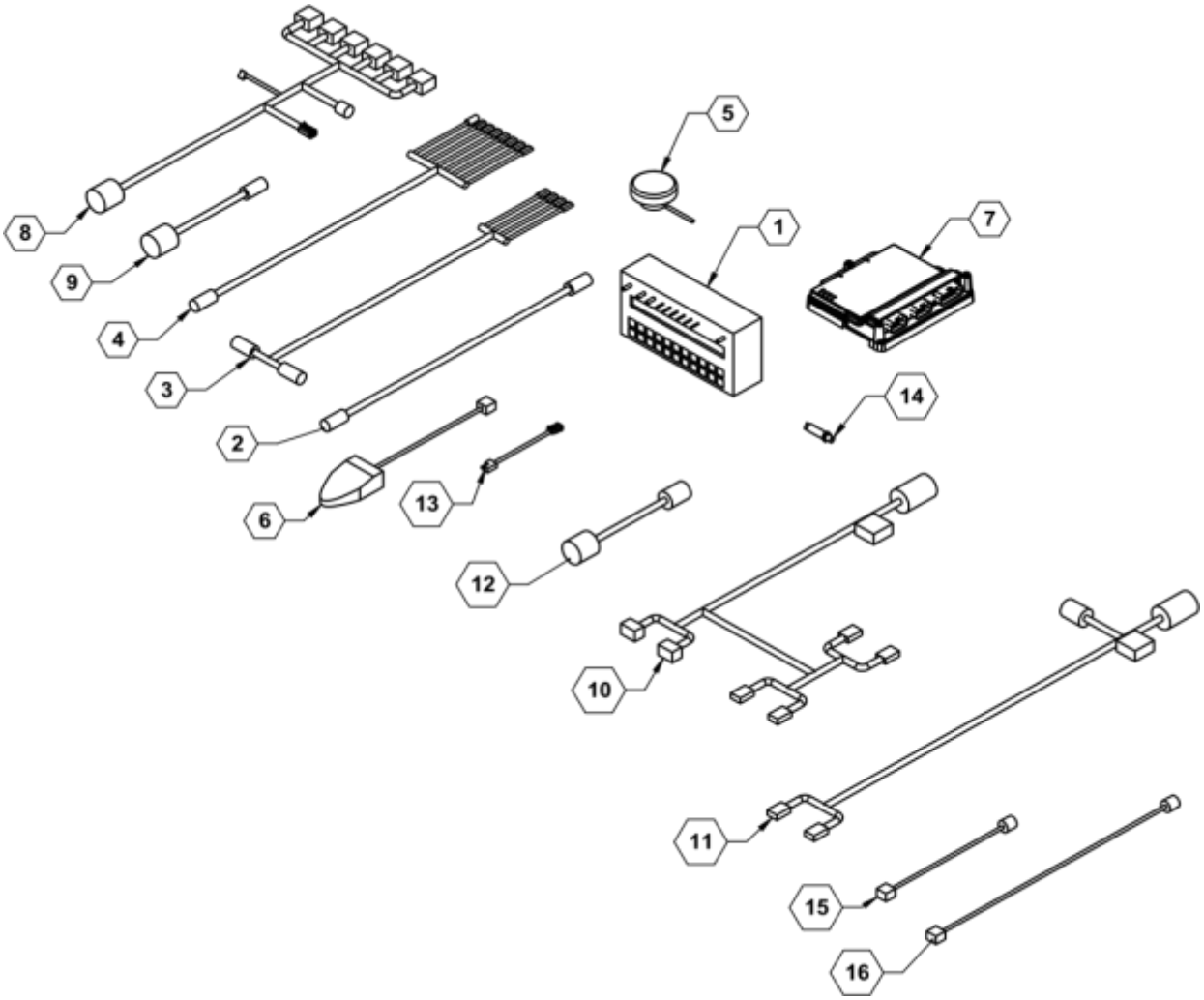

Parts List: Raven Harnesses & Components

ITEM	PART NO.	QTY.	DESCRIPTION
1	**631803**	AR	6 SECTION 450 CONSOLE
2	**631814**	AR	12' 16 PIN EXTENSION CABLE
3	**631818**	AR	10' 440/450 CONSOLE CABLE
4	**631819**	AR	16 PIN 6 SECTION CABLE
5	**631832**	AR	GPS SPEED SENSOR
6	**631856**	AR	FOOTSWITCH
7	**632010**	AR	RCM
8	**632080**	AR	47 PIN 6 SECTION CABLE
9	**632028**	AR	47 PIN TO 16 PIN ADAPTER
10	**632029**	AR	47 PIN RCM Y-CABLE
11	**632031**	AR	12’ ISO TO IBIC CABLE
12	**632033**	AR	47 PIN TO 37 PIN ADAPTER
13	**632034**	AR	TRAILER TO DEUTSCH PLUG ADAPTER CABLE
14	**632036**	AR	PRESSURE TRANSDUCER
15	**632061**	AR	CABLE, FOOTSWITCH, 12'
16	**632062**	AR	CABLE, FOOTSWITCH, 23'
NS	**631802**	AR	3 SECTION 440 CONSOLE

Control Harness 115-0171-085

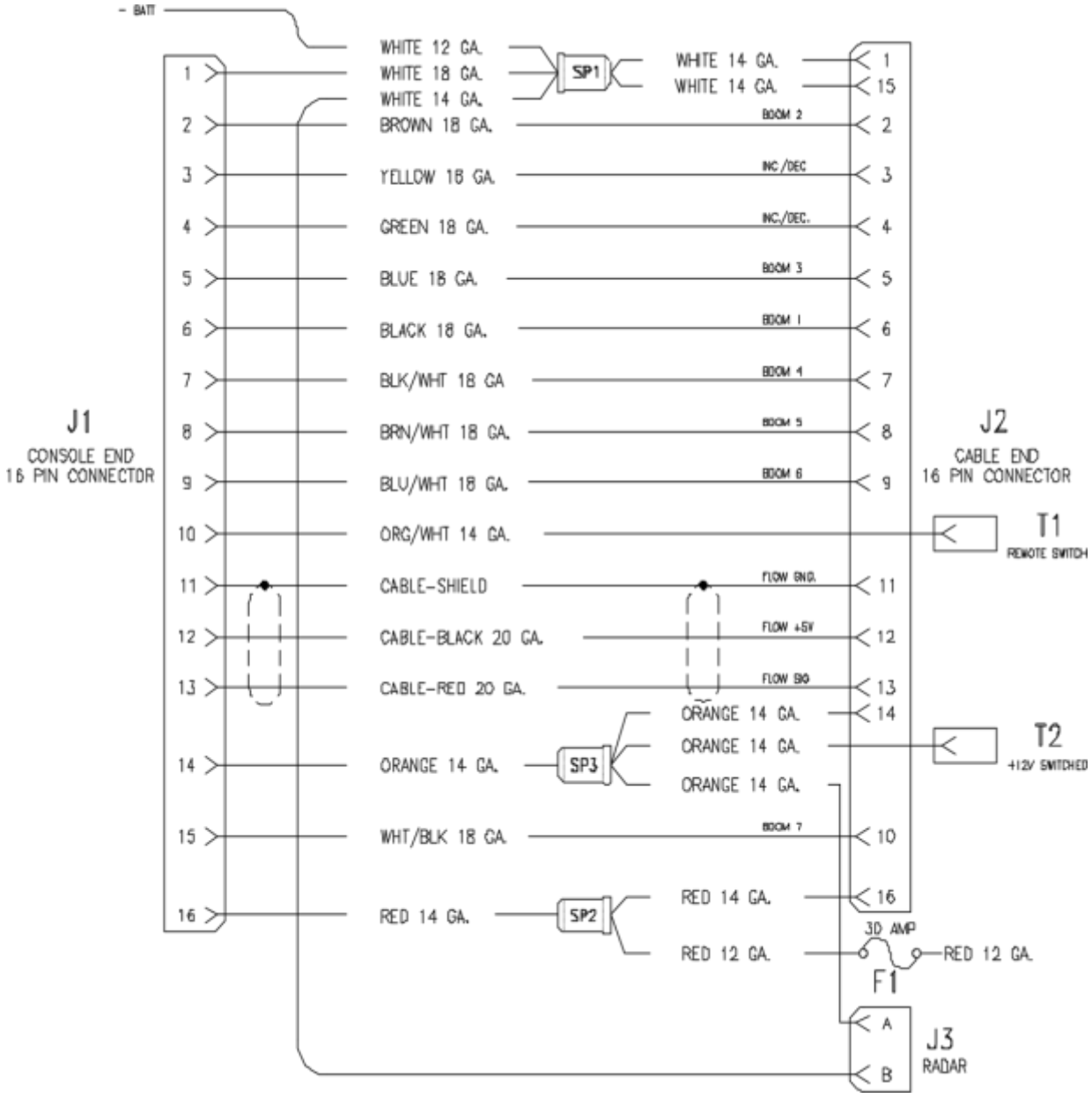

Control Harness 115-0159-856

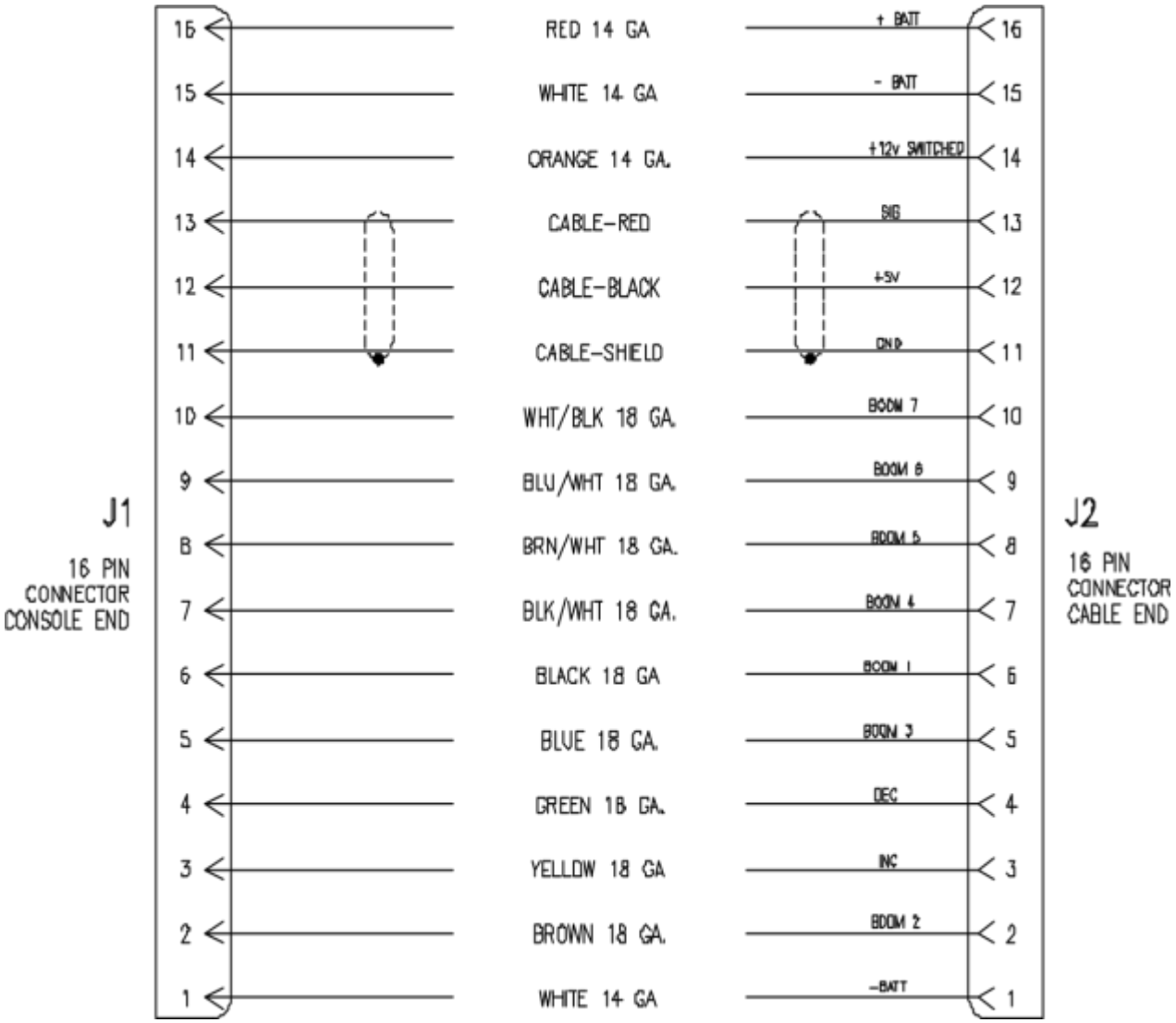

Control Harness 115-0171-086

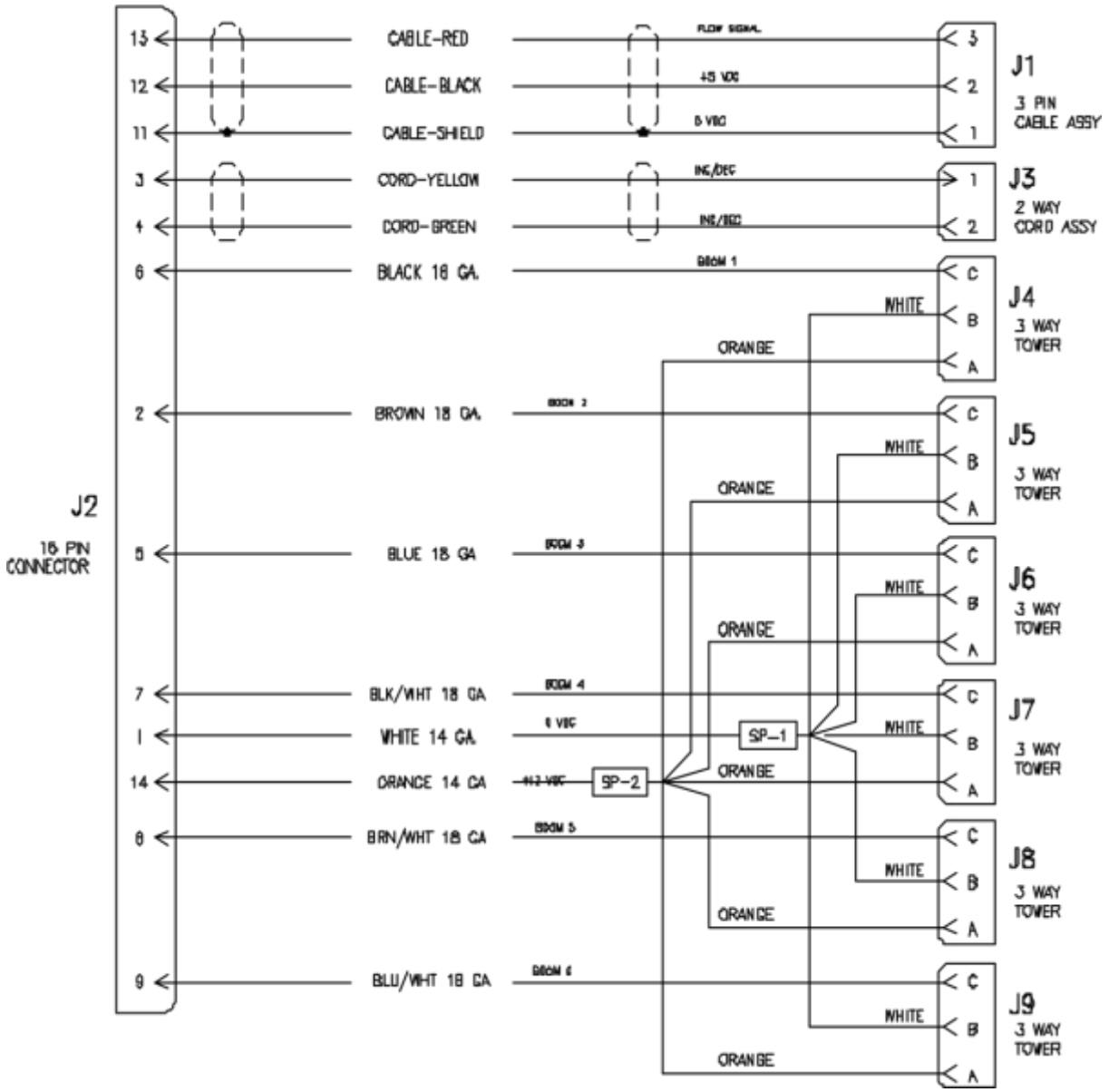

Raven RCM Rate Controller

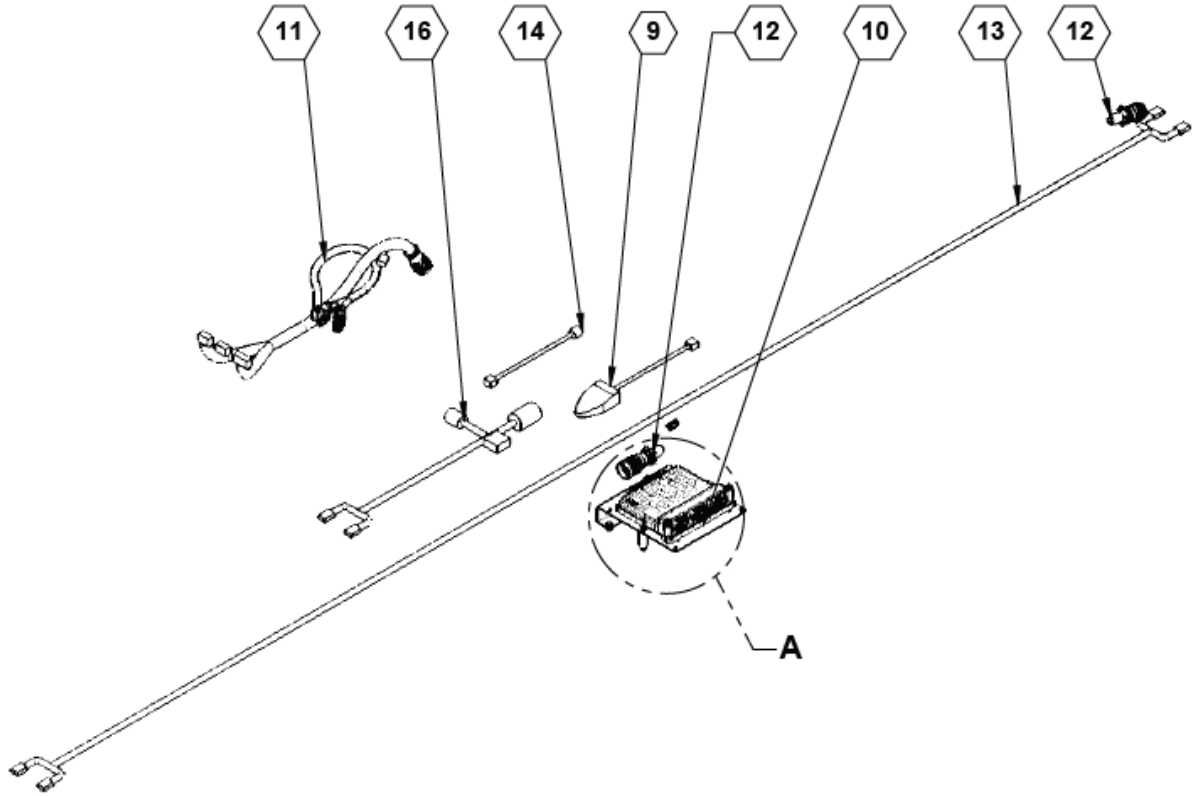

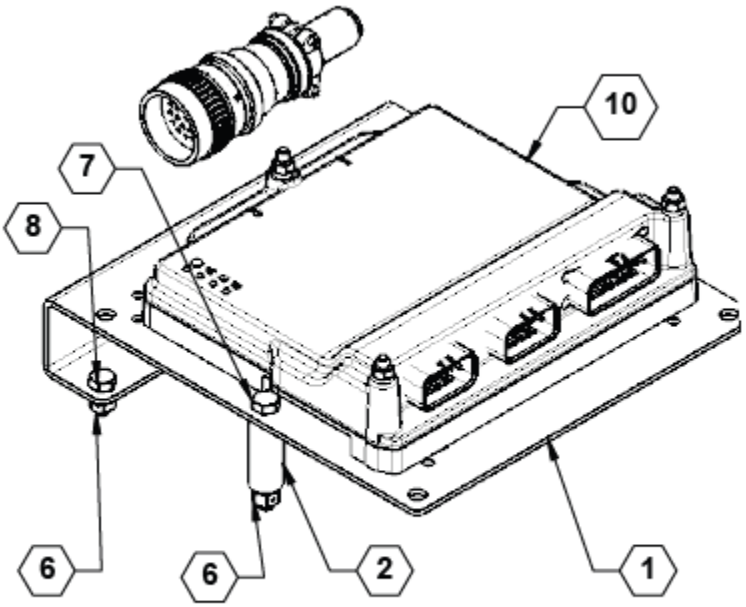

DETAIL A
SCALE 1 : 5

Parts List 36739 / 36729: Raven RCM Rate Controller

ITEM	PART NO.	QTY.	DESCRIPTION
1	**15813**	1	PLATE, FORMED MOUNT
2	**26236**	1	TUBE, SPACER
3	**596105M**	1	BOLT, HH 1/4-20X2-1/2 GR5 MAGNI
4	**596110M**	2	BOLT, HH 1/4-20 X 3 MAGNI
5	**596235M**	3	NUT, CENTERLOCK, 1/4-20 MAGNI
6	**596237M**	2	NUT, CENTERLOCK 3/8-16 MAGNI
7	**596637M**	1	BOLT, HH 3/8-16 X 2-3/4 GR5 MAGNI
8	**596818M**	1	BOLT, HH 3/8-16 X 3/4 GR5 MAGNI
9	**631856**	1	FOOTSWITCH, ISO PRODUCT CONTROL
10	**632010**	1	RAVEN RCM
11	**632029**	1	47 PIN RATE CTRL INTERFACE CABLE
12	**632035**	1	CABLE, 14' 47P RECT. TO 47P PLUG
13	**632055**	1	CABLE, 17' EXTENSION GEN 1 ISO
14	**632061**	1	CABLE, FOOTSWITCH, 12' ROW CROP TRACTOR
15	**632075**	1	HARNESS, 47P 6 SECTION
	632076		HARNESS, 47P 10 SECTION
16	**632217**	1	IBIC TO GEN 1 ISO 12'

John Deere RC2000 Rate Controller

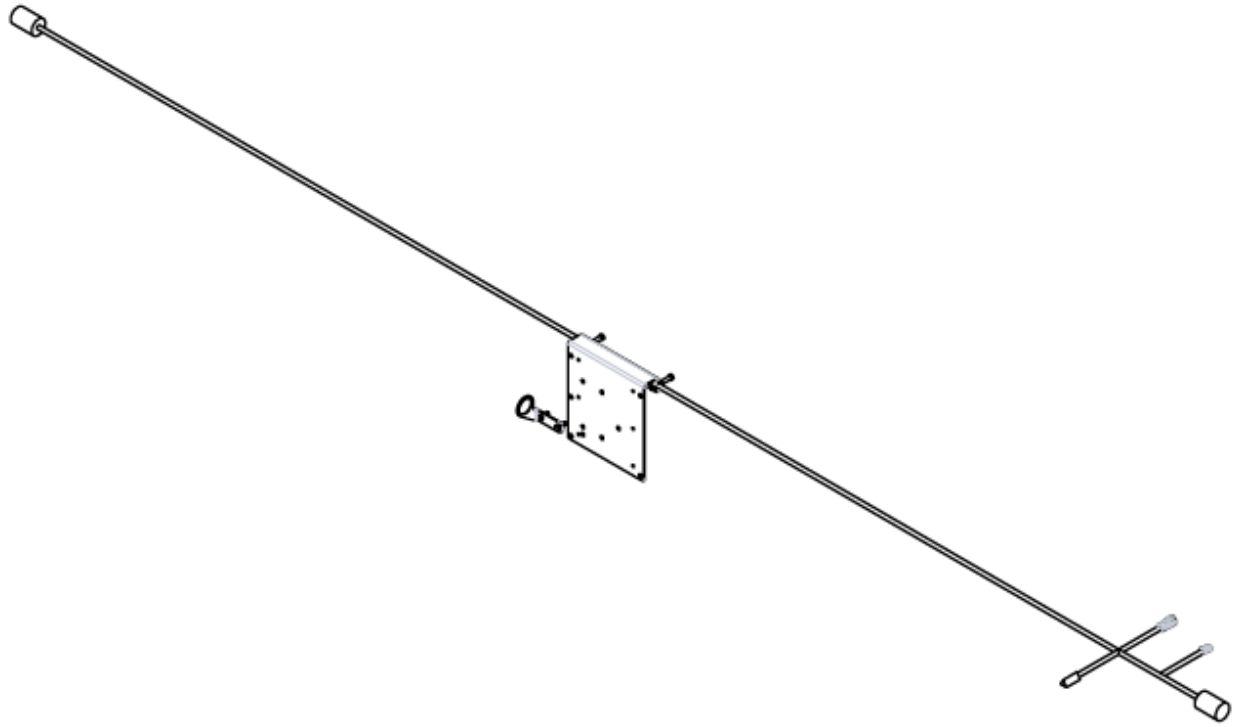

Parts List 47PCSJDRC6BTB / 47PCSJDRC10BTB: John Deere RC2000 Rate Controller

ITEM	PART NO.	QTY.	DESCRIPTION
1	**15813**	1	PLATE, FORMED MOUNT
2	**26236**	1	TUBE, SPACER
3	**35224**	1	BRACKET, 47 PIN HARNESS
4	**596128M**	2	BOLT, HH 3/8-16 X 1 GR5 MAGNI
5	**596237M**	4	NUT, CENTERLOCK 3/8-16 MAGNI
6	**596637M**	2	BOLT, HH 3/8-16 X 2-3/4 GR5 MAGNI
7	**632035**	1	CABLE, 47 PIN SPRAYER FRAME, 14'
8	**632075**	1	HARNESS, 47P 6 SECTION
	632076		HARNESS, 47P 10 SECTION

John Deere Greenstar Rate Controller

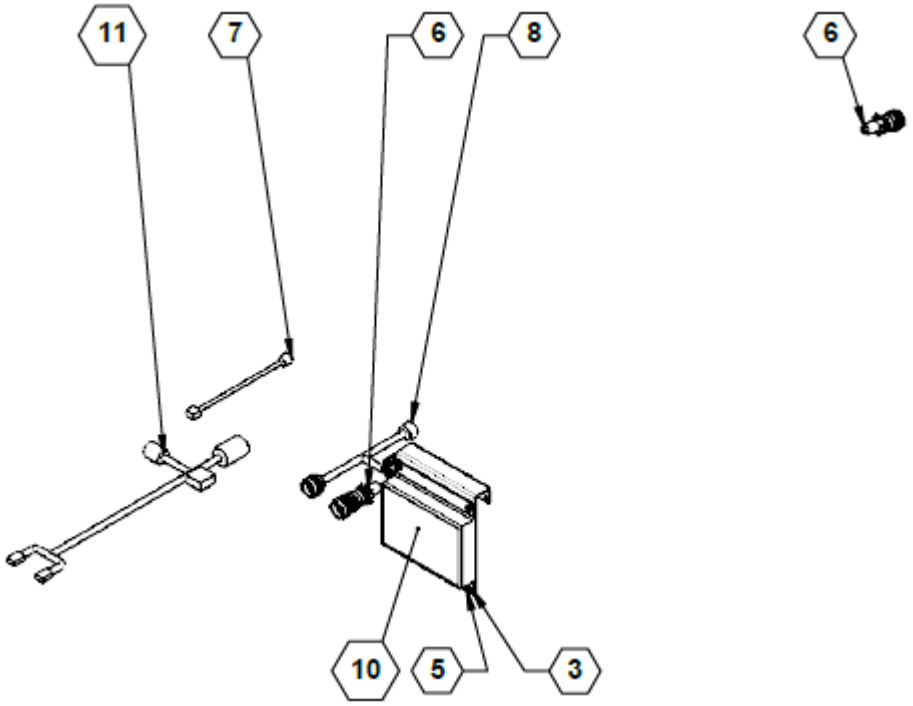

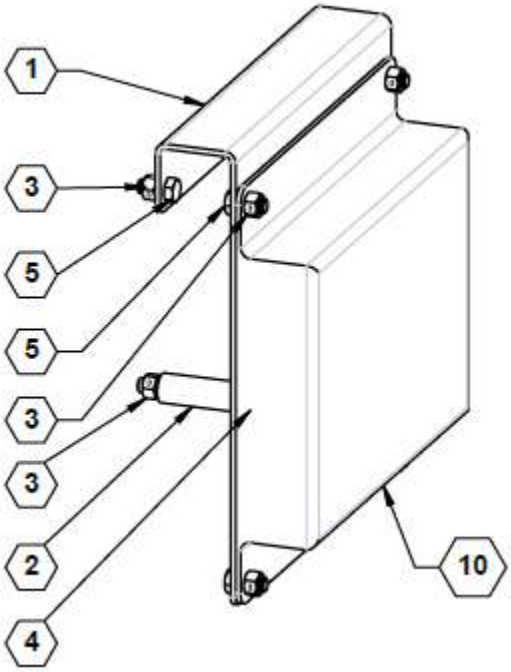

Parts List 36730 / 36738: John Deere Greenstar Rate Controller

ITEM	PART NO.	QTY.	DESCRIPTION
1	**15813**	1	PLATE, FORMED MOUNT
2	**26236**	1	TUBE, SPACER
3	**596237M**	5	NUT, CENTERLOCK 3/8-16 MAGNI
4	**596637M**	1	BOLT, HH 3/8-16 X 2-3/4 GR5 MAGNI
5	**596818M**	4	BOLT, HH 3/8-16 X 3/4 GR5 MAGNI
6	**632035**	1	CABLE, 14' 47P RECT. TO 47P PLUG
7	**632061**	1	CABLE, FOOTSWITCH, 12' ROW CROP TRACTOR
8	**632070**	1	37 TO 47 PIN ADAPTER CABLE
9	**632075**	1	HARNESS, 47P 6 SECTION
	632076		HARNESS, 47P 10 SECTION
10	**632145**	1	JD GREENSTAR RATE CONTROLLER
11	**632217**	1	IBIC TO GEN 1 ISO 12'

Capstan Controller

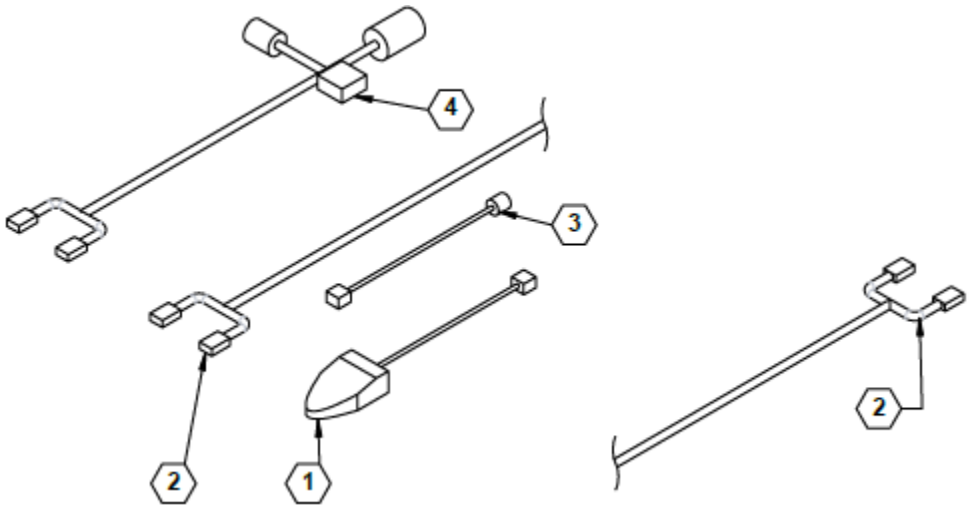

Parts List 36731: Capstan Controller

ITEM	PART NO.	QTY.	DESCRIPTION
1	**631856**	1	FOOTSWITCH, ISO PRODUCT CONTROL
2	**632055**	1	CABLE, 17' EXTENSION GEN 1 ISO
3	**632061**	1	CABLE, FOOTSWITCH, 12' ROW CROP TRACTOR
4	**632217**	1	IBIC TO GEN 1 ISO 12'

Capstan Kits

Parts List 632181 / 632183 / 632184: Capstan Kits

ITEM	PART NO.	QTY.	DESCRIPTION
-	632183	1	CAPSTAN KIT, 120’ 15”
-	632181	1	CAPSTAN KIT, 120’ 20”
-	632184	1	CAPSTAN KIT, 132’ 22”

Customer-Supplied Raven or John Deere RC2000

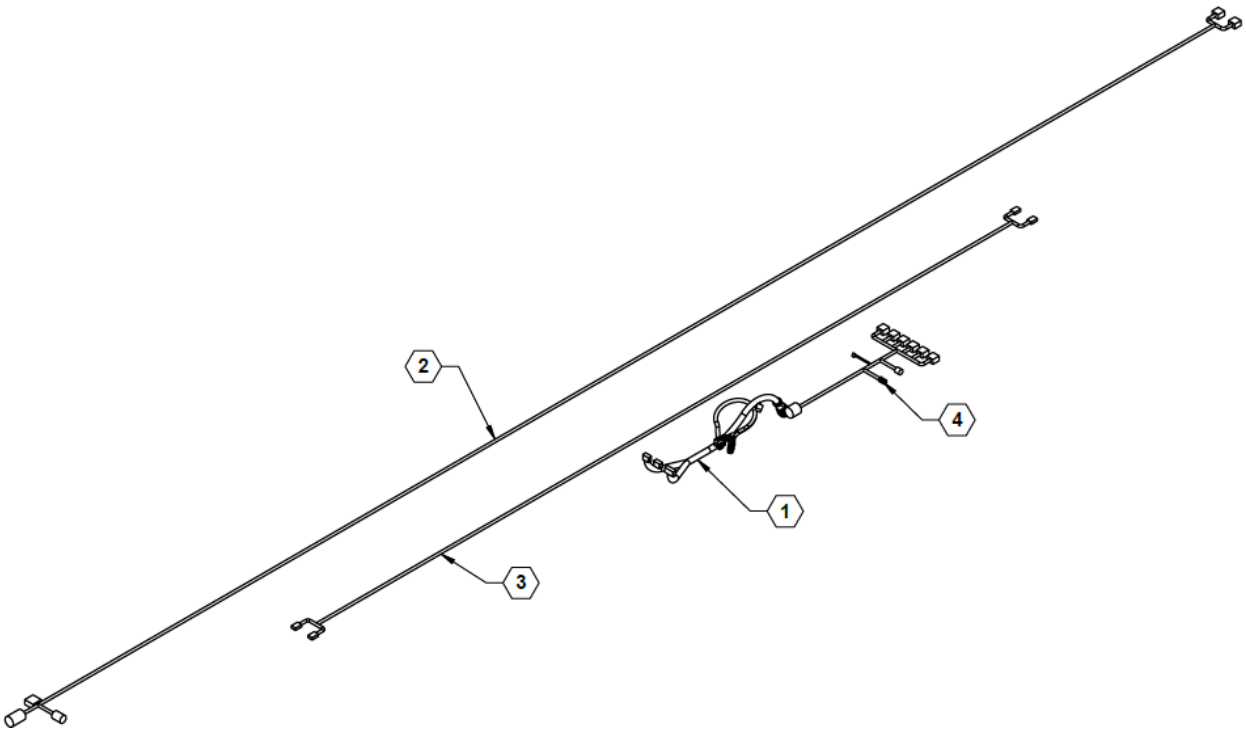

Parts List 35741: Customer-Supplied Raven or John Deere RC2000

ITEM	PART NO.	QTY.	DESCRIPTION
1	**632029**	1	47 PIN RATE CTRL INTERFACE CABLE
2	**632051**	1	IBIC TO GEN 1 ISO 24’
3	**632055**	1	CABLE, 17’ EXTENSION GEN 1 ISO
4	**632080**	1	6 SECTION APP FINAL HARNESS

Customer-Supplied John Deere Greenstar

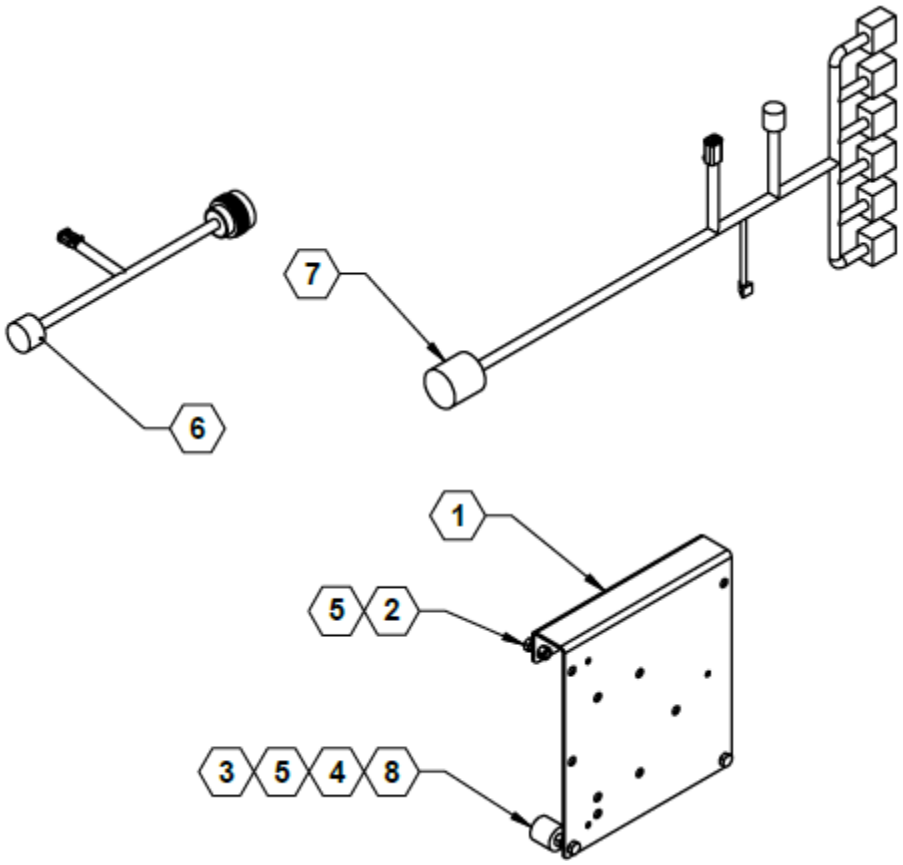

Parts List 35404 / 35744: Customer-Supplied John Deere Greenstar

ITEM	PART NO.	QTY.	DESCRIPTION
1	**15813**	1	PLATE, FORMED MOUNT
2	**596128M**	2	BOLT, HH 3/8-16 X 1 GR5 MAGNI
3	**596129M**	2	BOLT, HH 3/8-16 X 1-1/2 GR5 MAGNI
4	**596213M**	2	NUT HEX 3/8-16 MAGNI
5	**596237M**	4	NUT, CENTERLOCK 3/8-16 MAGNI
NS	**632051**	1	IBIC TO GEN 1 ISO 24’
NS	**632055**	1	CABLE, 17’ EXTENSION GEN 1 ISO
6	**632070**	1	37 TO 47 PIN ADAPTER CABLE
7	**632080**	1	6 SECTION 6’ FINAL CABLE
8	**750050**	2	BUMPER, EBCO

Customer-Supplied Other 37-Pin

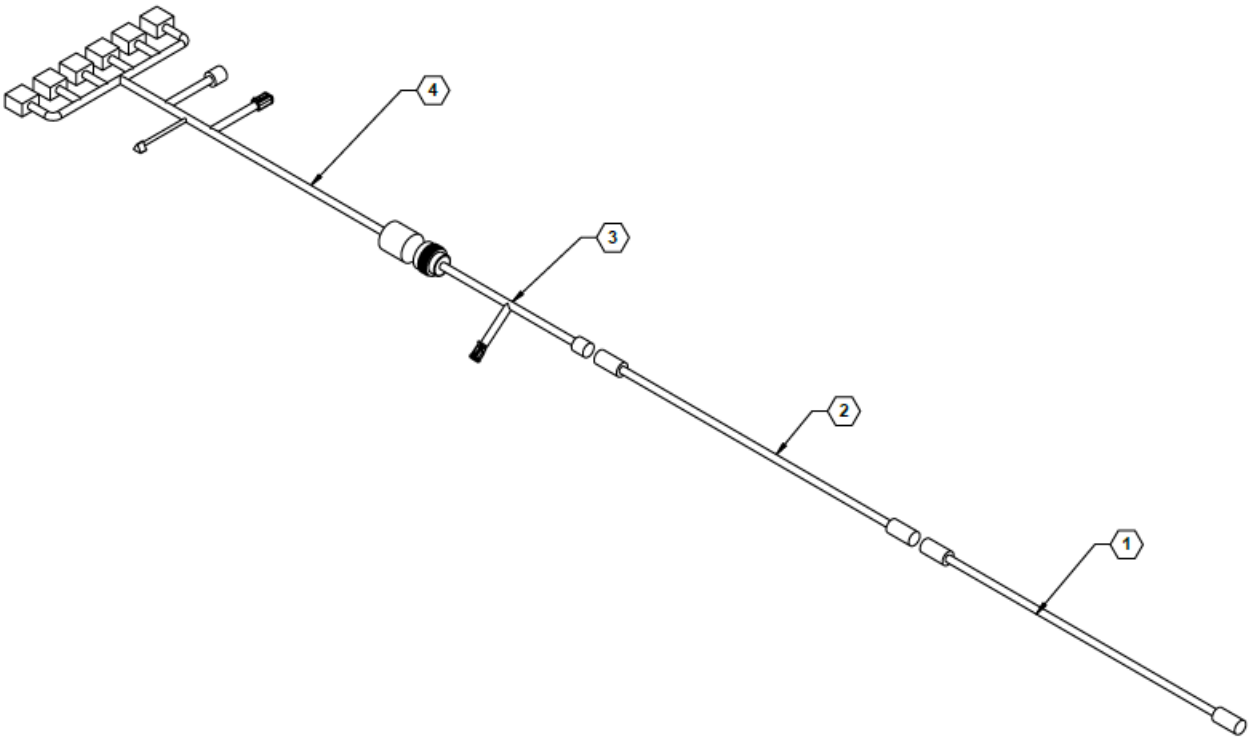

Parts List 631980: Customer-Supplied Other 37-Pin

ITEM	PART NO.	QTY.	DESCRIPTION
1	**631814**	1	CABLE, 6 BOOM 12' EXTENSION
2	**631815**	1	CABLE, 6 BOOM 24’ EXTENSION
3	**632028**	1	47 PIN TO 16 PIN ADAPTER
4	**632080**	1	6 SECTION APP FINAL HARNESS

HYDRAULICS

Hydraulic Diagram, Truss Boom (830017)

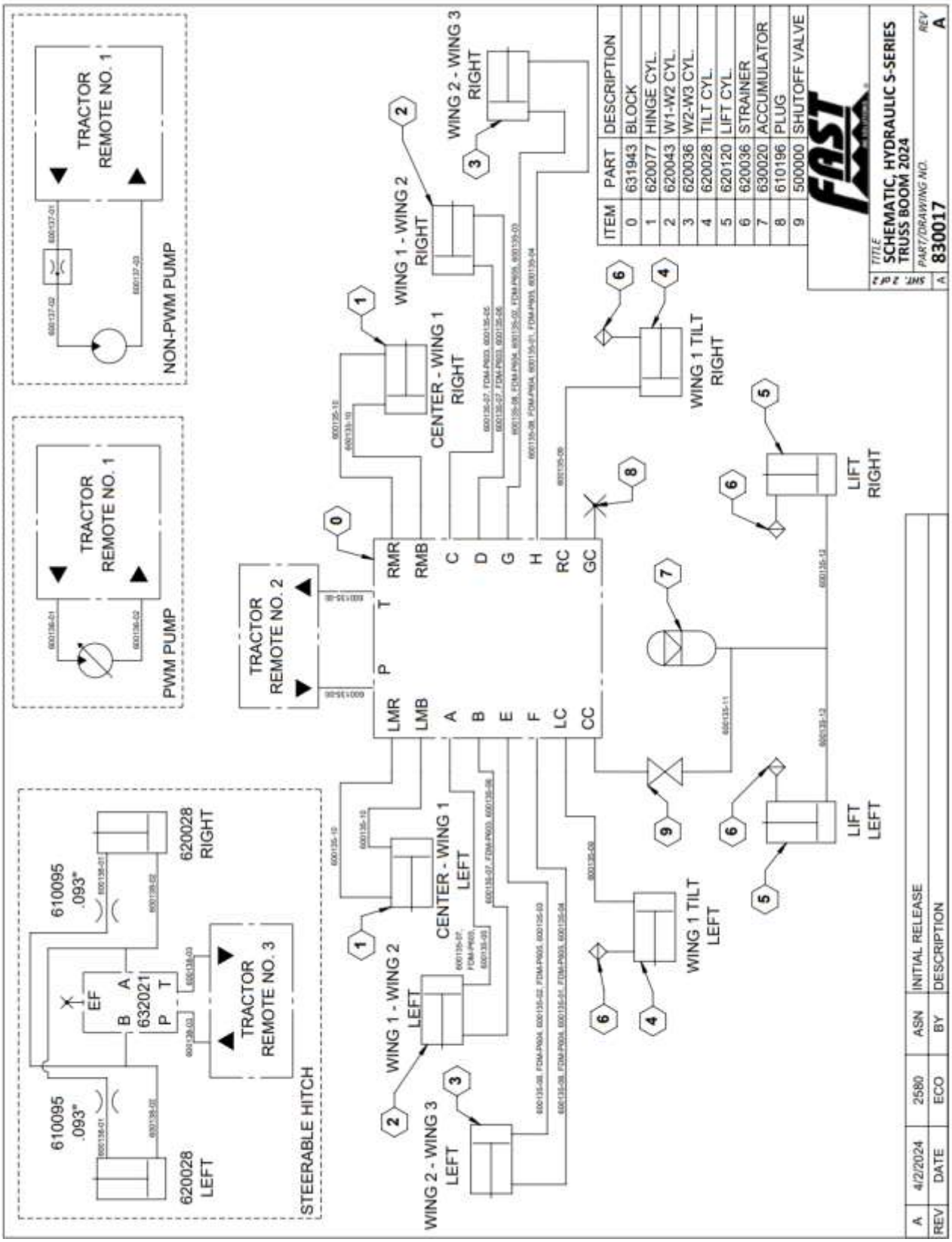

Boom Hydraulic Hoses & Fittings

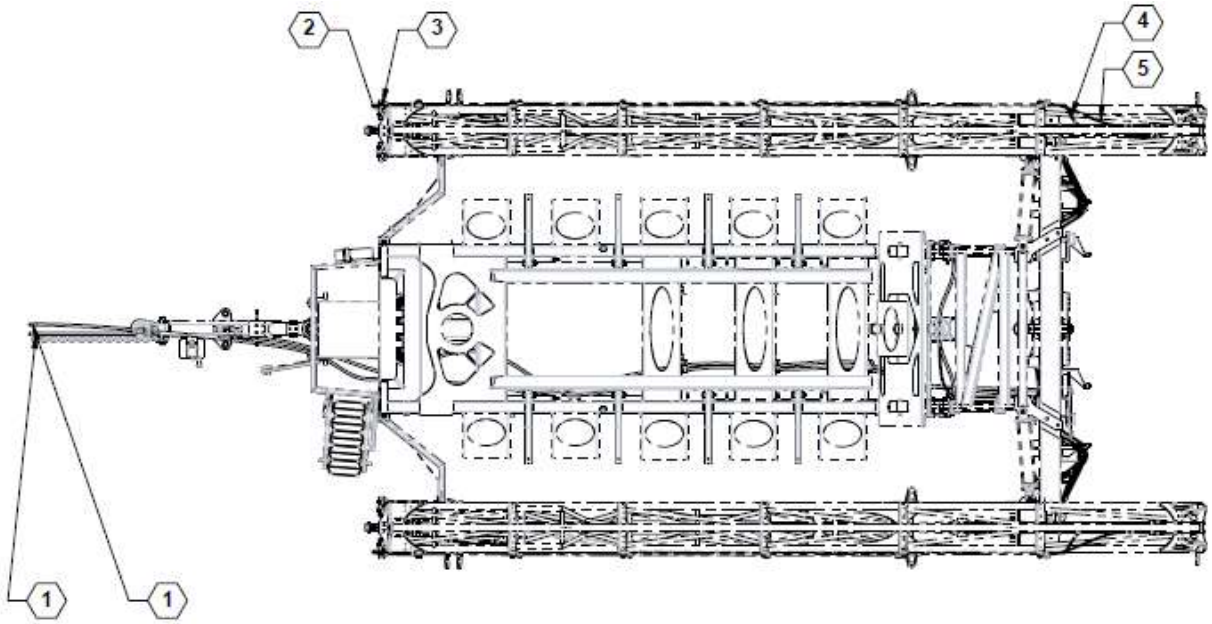

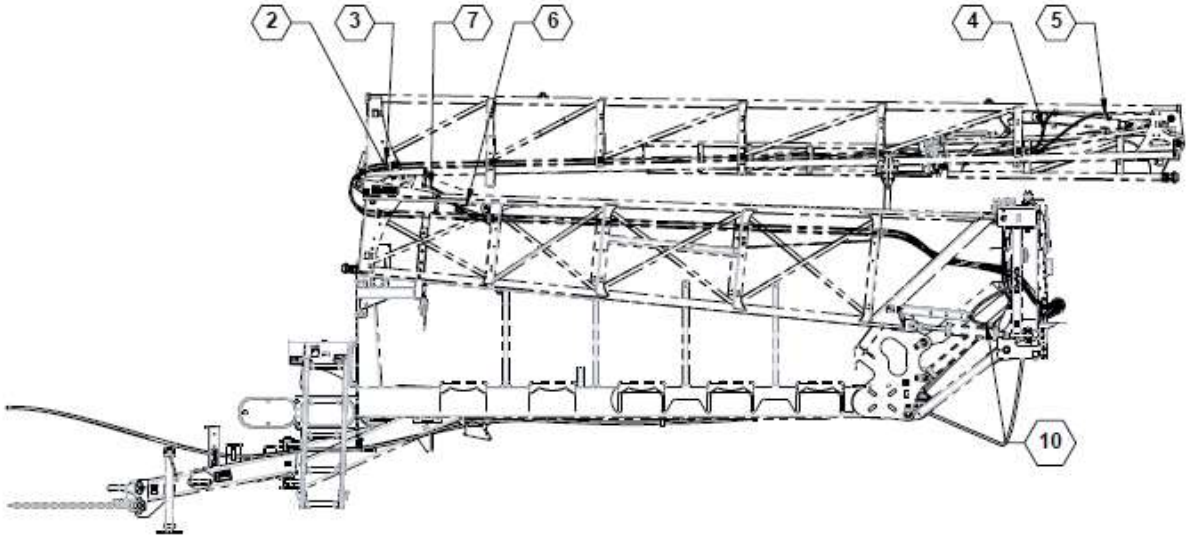

Boom Hydraulic Hoses & Fittings (continued)

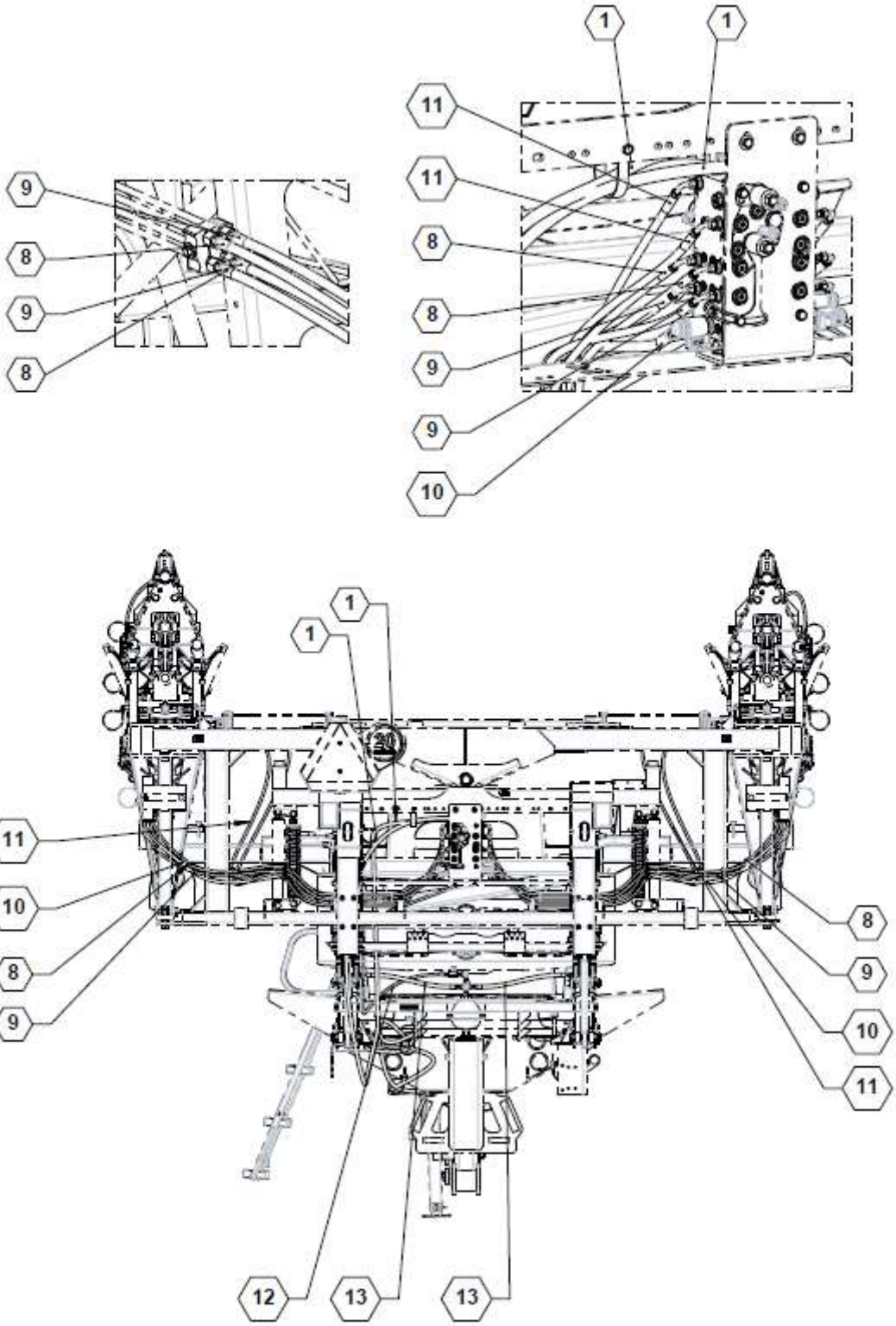

Parts List 600135: Boom Hydraulic Hoses & Fittings

ITEM	PART NO.	QTY.	DESCRIPTION
1	**600135-00-ZN**	2	HOSE ASSY, 8-8MORB-8FJX-394
2	**600135-01-ZN**	2	HOSE ASSY, 4-6MJX-6MJX-23
3	**600135-02-ZN**	2	HOSE ASSY, 4-6MJX-6MJX-39
4	**600135-03-ZN**	2	HOSE ASSY, 4-6MJX-4FJX-29
5	**600135-04-ZN**	2	HOSE ASSY, 4-6MJX-4FJX-34
6	**600135-05-ZN**	2	HOSE ASSY, 6-6MJX-6FJX-25
7	**600135-06-ZN**	2	HOSE ASSY, 6-6MJX-6FJX-28
8	**600135-07-ZN**	4	HOSE ASSY, 6-4FJX90-6MJX-138
9	**600135-08-ZN**	4	HOSE ASSY, 4-4FJX90-6MJX-140
10	**600135-09-ZN**	2	HOSE ASSY, 6-6FJX90-8FJX-115
11	**600135-10-ZN**	4	HOSE ASSY, 4-4FJX90-6MJX-115
12	**600135-11-ZN**	1	HOSE ASSY, 4-4FJX90-4FJX-143
13	**600135-12-ZN**	2	HOSE ASSY, 8-8FJX-8FJX-26
14	**830017**	0	SCHEMATIC, HYDRAULIC S-SERIES

Boom Center Hydraulic Block & Fittings

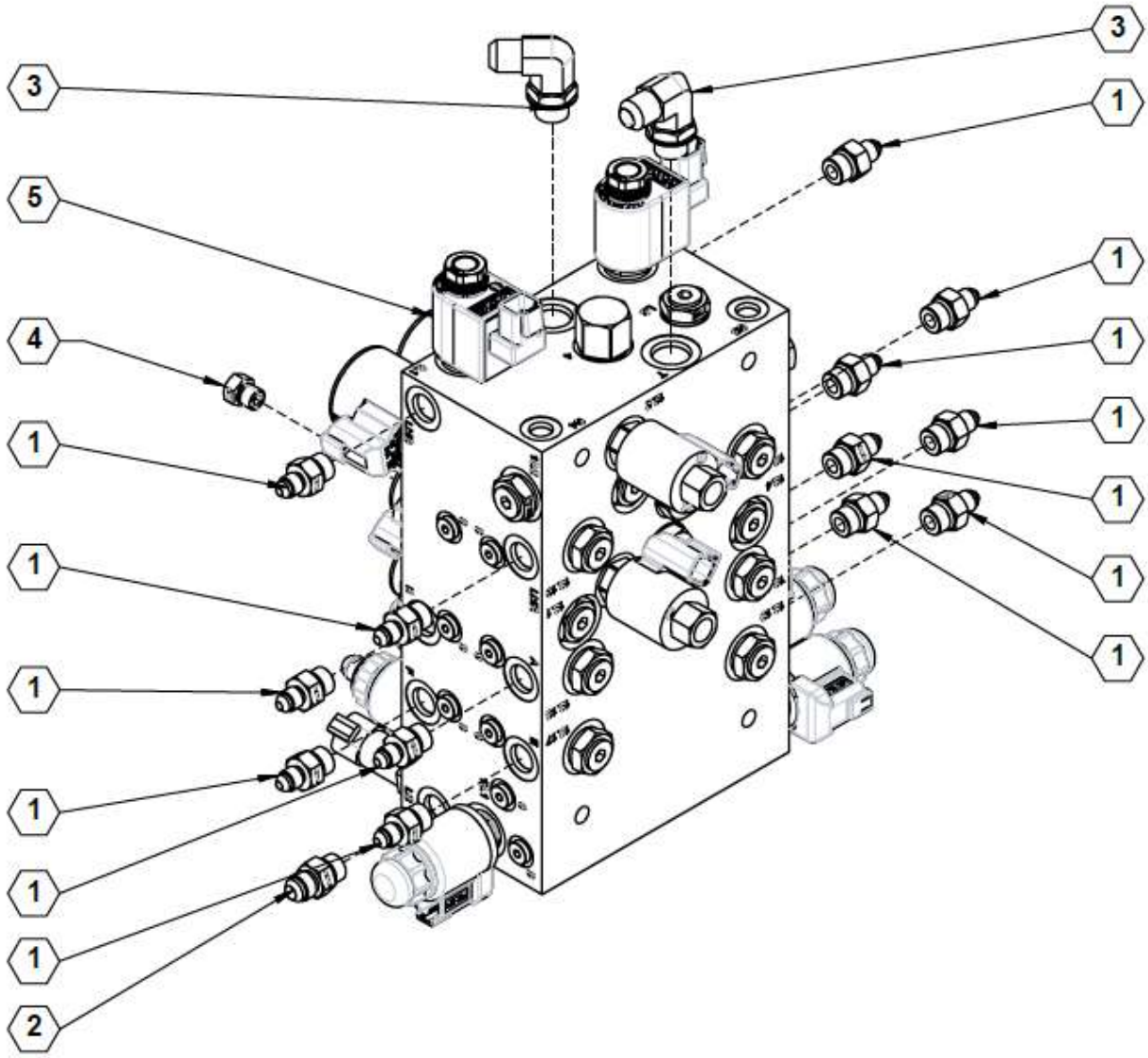

Parts List 36711: Boom Center Hydraulic Block & Fittings

ITEM	PART NO.	QTY.	DESCRIPTION
1	**610008**	13	ADAPTER, -4MJIC X -6MORB
2	**610010**	2	ADAPTER, -6MJIC X -6MORB
3	**610097**	2	ADAPTER, -8MJIC X -8MORB90
4	**610196**	1	FITTING, PLUG 04-MORB
5	631943 / 632120	1	YAW MANIFOLD

Boom Center Hydraulic Block Connections (631943)

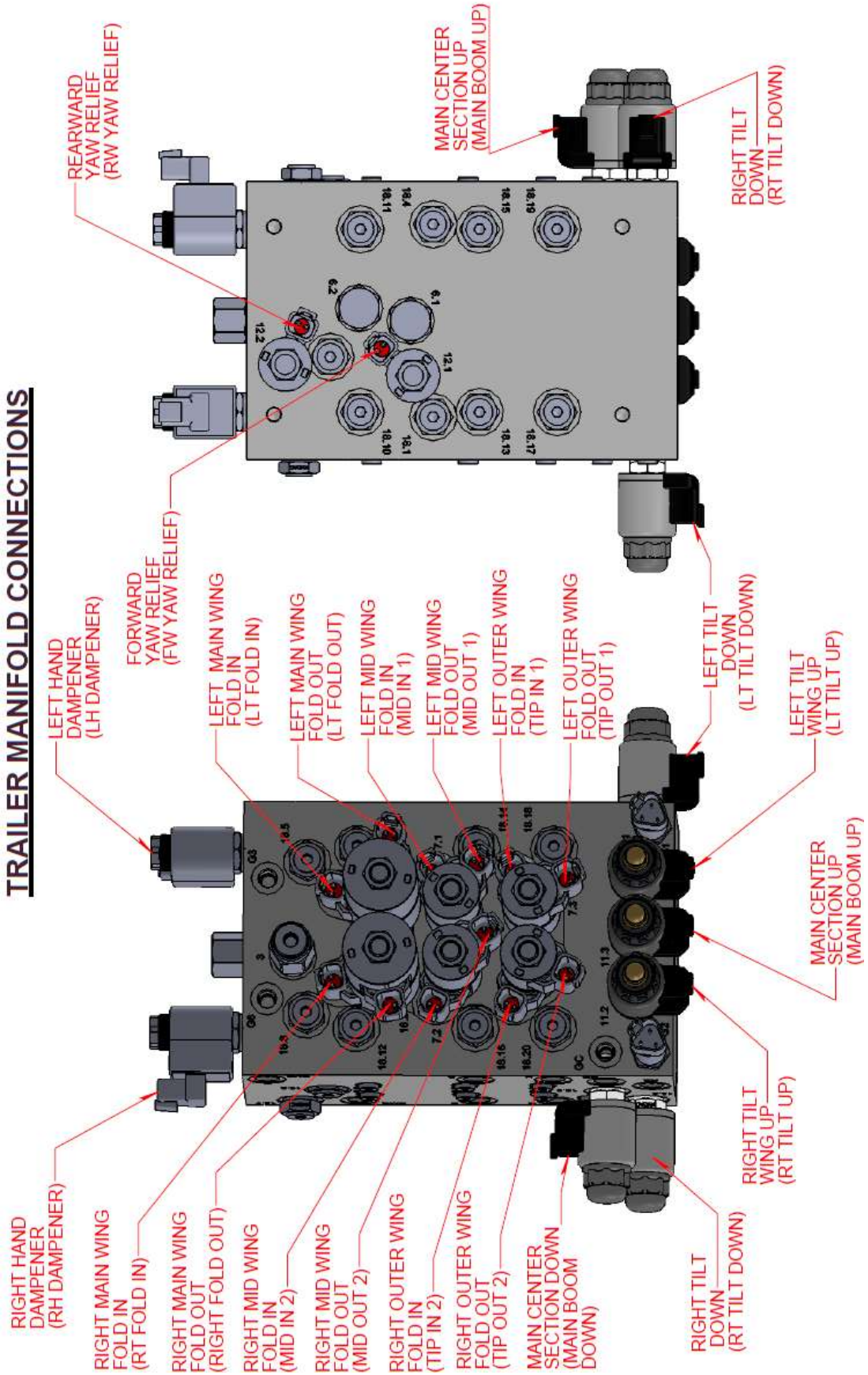

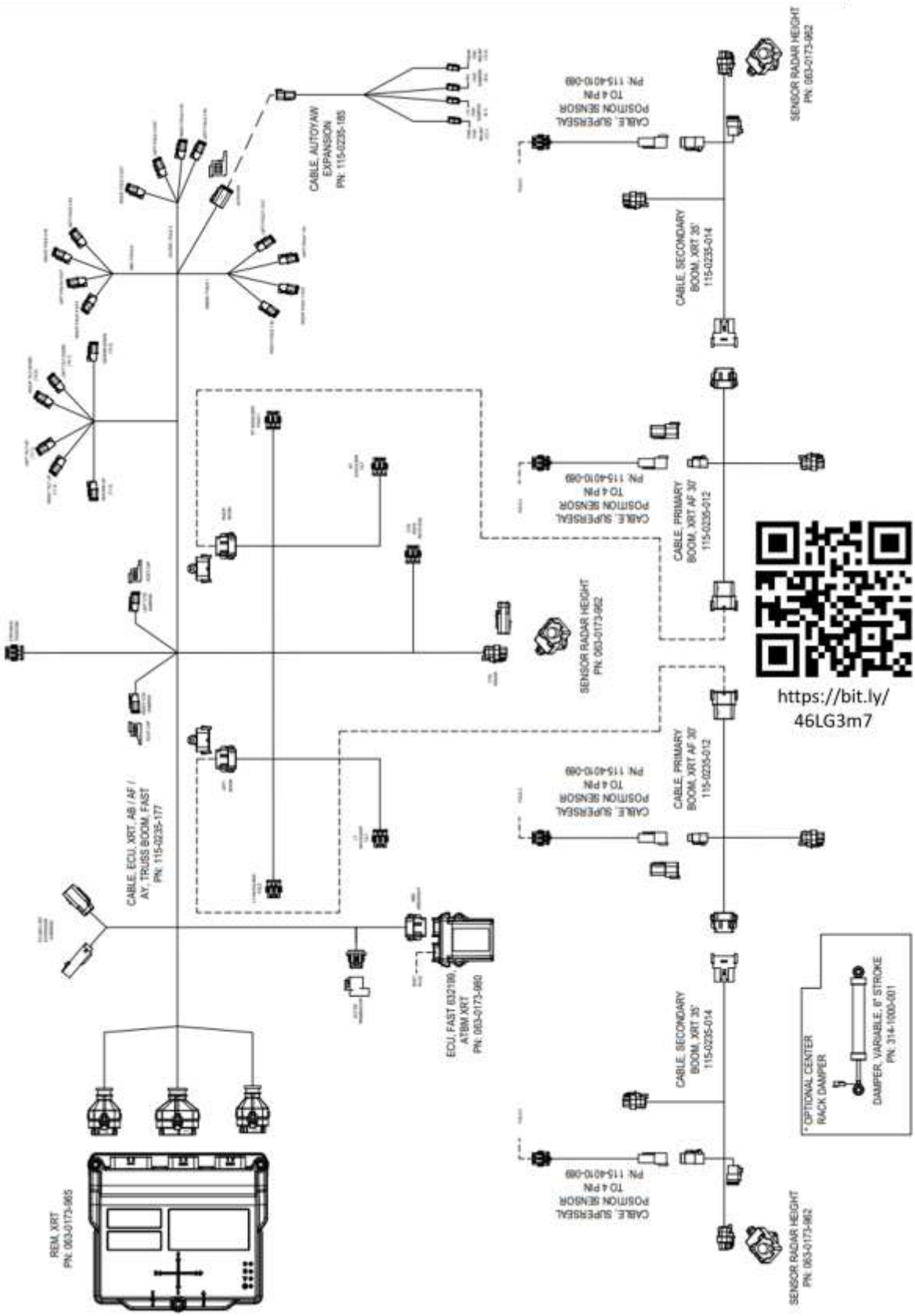

See https://fastagsolutions.com/wp-content/uploads/2023/12/054-0239-100-A-AutoBoom-XRT-System-Drawing-for-Fast-MY-2024-newer.pdf

Boom Center Hydraulic Block Breakdown

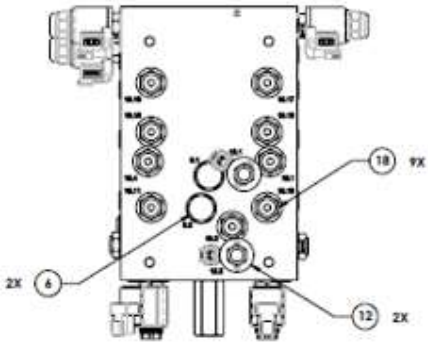

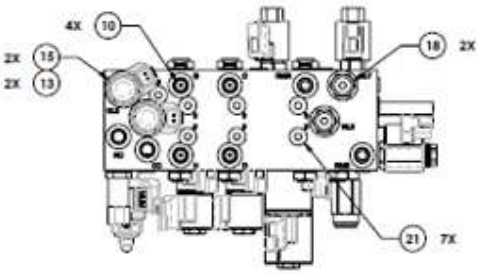

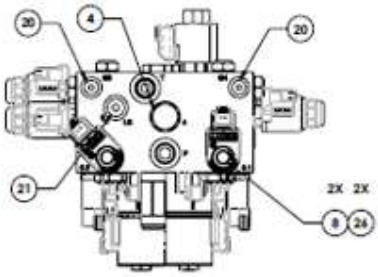

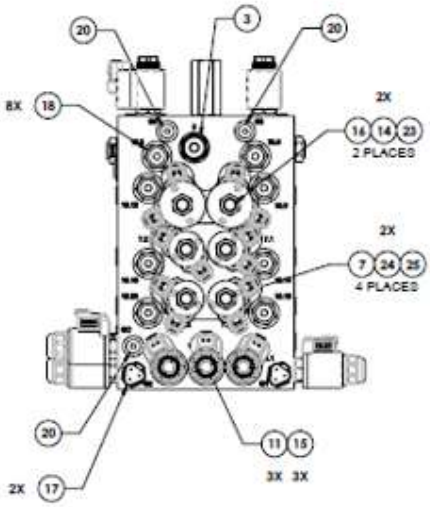

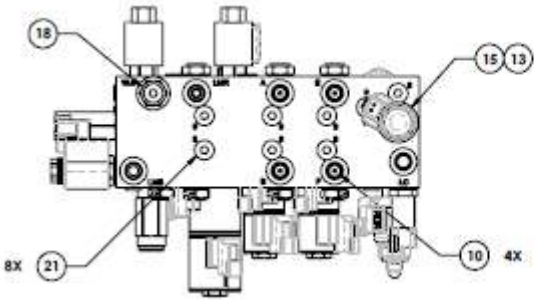

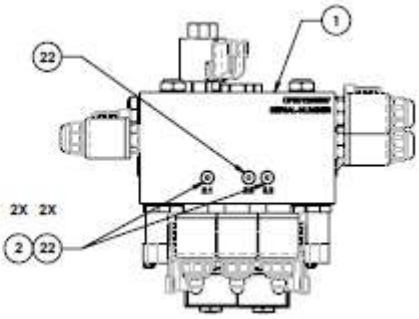

Parts List 631943: Boom Center Hydraulic Block Breakdown

26	2	334-0002-185	COIL, 12VDC, M13, DEUTSCH, DT 04-2P, -8
25	4	334-0002-183	SPACER, COIL, ER, -8
24	8	334-0002-123	COIL, 12 VDC, ER, DEUTSCH, DT04-2P, -8
23	2	334-0002-119	SPACER, COIL, ER -10/12
22	3	333-0012-262	FITTING, PLUG, O-RING, -2
21	16	333-0012-104	FITTING, PLUG, O-RING, -6
20	5	333-0012-051	FITTING, PLUG, O-RING, -4
19	1		HYDAC 02610072 08 DOUBLE PILOT PISTON
18	20		HYDAC CHECK VALVE, RV08A-01-C-N-05
17	2	422-0000-086	PRESSURE TRANSDUCER, 4-20MA 0-3000 PSI
16	2	334-0002-182	CARTRIDGE, HYDRAULIC, PROPORTIONAL, DIRECTIONAL, 4-WAY, 3 POSITION, MOTOR SPOOL, -10
15	6	334-0002-118	COIL, 12VDC, DN-40, DEUTSCH DT04-2P CONNECTOR, -8
14	4	334-0002-117	COIL, 12 VDC, ER, DEUTSCH, DT04-2P, -10/12
13	3	334-0002-107	CARTRIDGE, HYDRAULIC, BLOCKER, DOUBLE, -08
12	2	334-0002-181	CARTRIDGE, HYDRAULIC, PROPORTIONAL RELIEF, 2-WAY NORMALLY CLOSED
11	3	334-0002-106	CARTRIDGE, HYDRAULIC, PROPORTIONAL, REDUCING/RELIEVING, -08
10	8	333-0002-222	ORIFICE, HYDRAULIC .0465 DIA. FLOATING HEX.
9	1		M&W BALL AND SPRING LOAD SENSE CHECK
8	2	334-0002-179	CARTRIDGE, HYDRAULIC DAMPENER, 2-WAY, NORMALLY OPEN W/ NUT
7	4	334-0002-148	CARTRIDGE, HYDRAULIC, PROPORTIONAL, DIRECTIONAL, 4-WAY, 3 POSITION, MOTOR SPOOL, -8
6	2	334-0002-104	CARTRIDGE, HYDRAULIC, CHECK, W/SCREEN, -10
5	1	333-0012-302	FITTING, HYDRAULIC ORIFICE, 0.020 ID, 1/4-20 UNC
4	1	334-0002-105	CARTRIDGE, HYDRAULIC, DIRECTIONAL, PILOTED, 2-WAY, 2-POSITION, NORMALLY CLOSED, -10
3	1	334-0002-178	CARTRIDGE, HYDRAULIC, RELIEF, DIRECT ACTING (2-1), -10
2	2	333-0012-284	FITTING, HYDRAULIC ORIFICE 0.060 W/ 1/4-20 THREAD
1	1	334-0002-175	MANIFOLD, HYDRAULIC, FAST, BOOM CONTROLS
ITM	**QTY**	**PART NUMBER**	**DESCRIPTION**

See Raven 063-0131-152

Boom Center Grease Hoses & Fittings

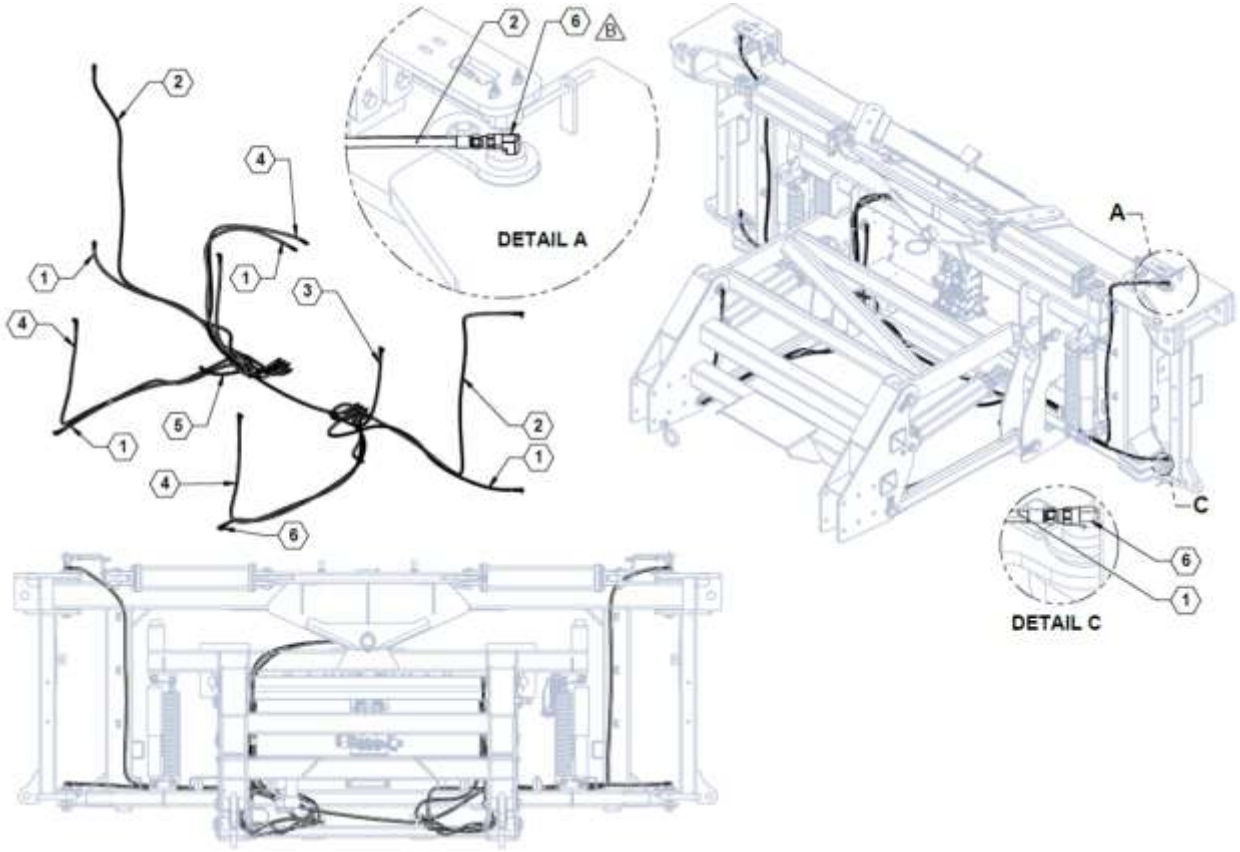

Parts List 600131: Boom Center Grease Hoses & Fittings

ITEM	PART NO.	QTY.	DESCRIPTION
1	**600131-100**	5	HOSE ASSY, 02-2NPTX-2GREASE-72
2	**600131-200**	2	HOSE ASSY, 02-2NPTX-2GREASE-110
3	**600131-300**	2	HOSE ASSY, 02-2NPTX-2GREASE-42
4	**600131-400**	3	HOSE ASSY, 02-2NPTX-2GREASE-88
5	**600131-500**	2	HOSE ASSY, 02-2NPTX-2GREASE-28
6	**610184**	10	FITTING, -2MPT X -2FPT 90

Product Pump (PWM) Hydraulic Hose & Fittings

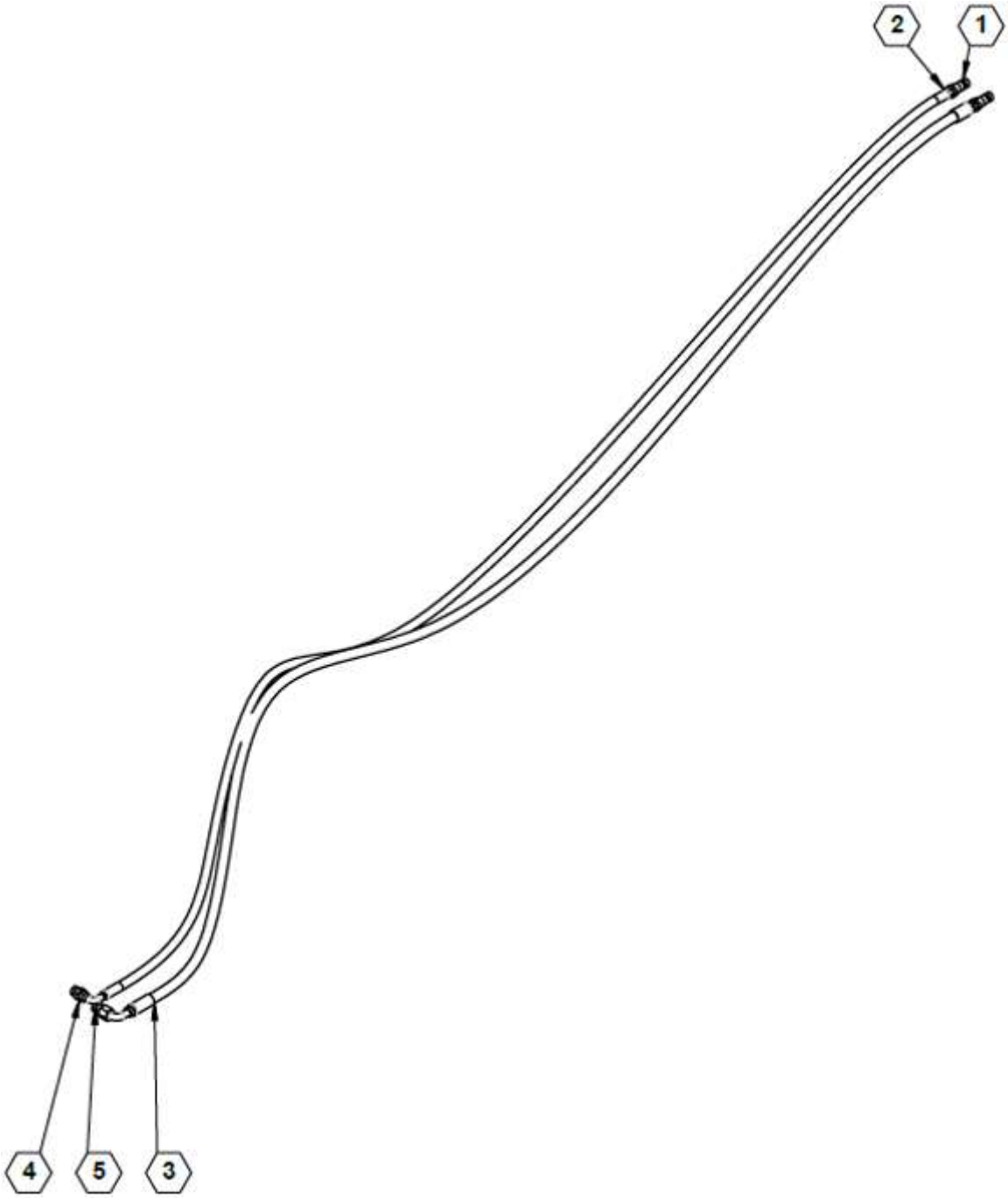

Parts List 600136: Product Pump (PWM) Hydraulic Hose & Fittings

ITEM	PART NO.	QTY.	DESCRIPTION
1	**520048**	2	PIONEER COUPLER #8 FORB
2	**600136-01-ZN**	1	HOSE ASSY, 8-8MORB-10FJX90-158
3	**600136-02-ZN**	1	HOSE ASSY, 10-8MORB-10FJX90-158
4	**610060**	1	JIC #8 TO ORING #10
5	**610106**	1	ADAPTER, -10MJIC X -10MORB

Product Pump (Non-PWM) Hydraulic Hose & Fittings

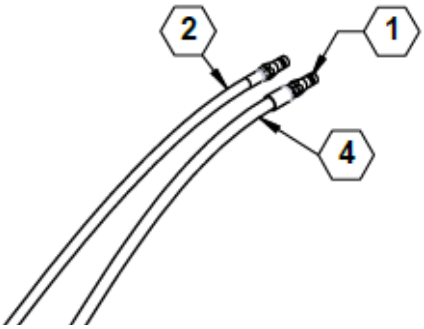

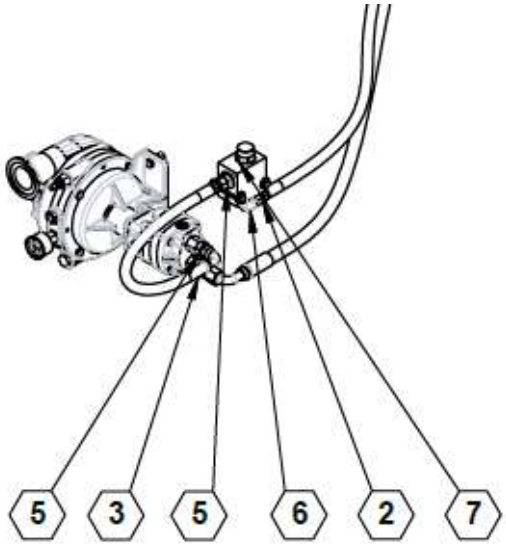

Parts List 600137: Product Pump (Non-PWM) Hydraulic Hose & Fittings

ITEM	PART NO.	QTY.	DESCRIPTION
1	**520048**	2	PIONEER COUPLER #8 FORB
2	**600137-01-ZN**	1	HOSE ASSY, 8-8MORB-8FJX-149
3	**600137-02-ZN**	1	HOSE ASSY, 8-8FJX-10FJX90-24
4	**600137-03-ZN**	1	HOSE ASSY, 10-8MORB-10FJX90-154
5	**610060**	2	JIC #8 TO ORING #10
6	**610086**	1	JIC #8 TO O-RING #10 ELBOW 90°
7	**610099**	1	VALVE, FLOW CONTROL, P.C.
8	**610106**	1	ADAPTER, -10MJIC X -10MORB

Steerable Hitch Hoses & Fittings

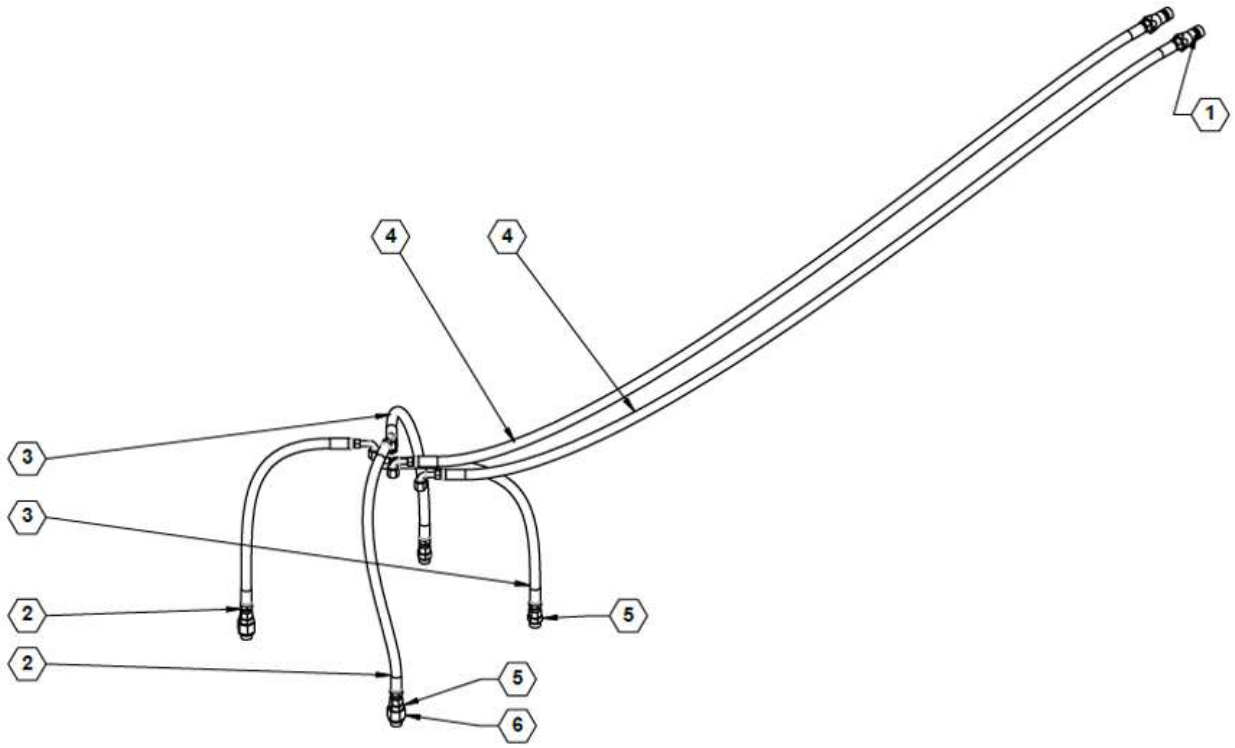

Parts List 600138: Steerable Hitch Hoses & Fittings

ITEM	PART NO.	QTY.	DESCRIPTION
1	**520048**	2	PIONEER COUPLER #8 FORB
2	**600138-01-ZN**	2	HOSE ASSY, 6-6FJX-6FJX90-26
3	**600138-02-ZN**	2	HOSE ASSY, 6-6FJX-6FJX-25
4	**600138-03-ZN**	2	HOSE ASSY, 6-6FJX90-8MORB-81
5	**610011**	4	JIC #6 TO ORING #8
6	**610095**	2	.093 ORIFICE FITTING
7	**830017**	0	SCHEMATIC, HYDRAULIC S-SERIES

Steerable Hitch Hydraulic Block Base

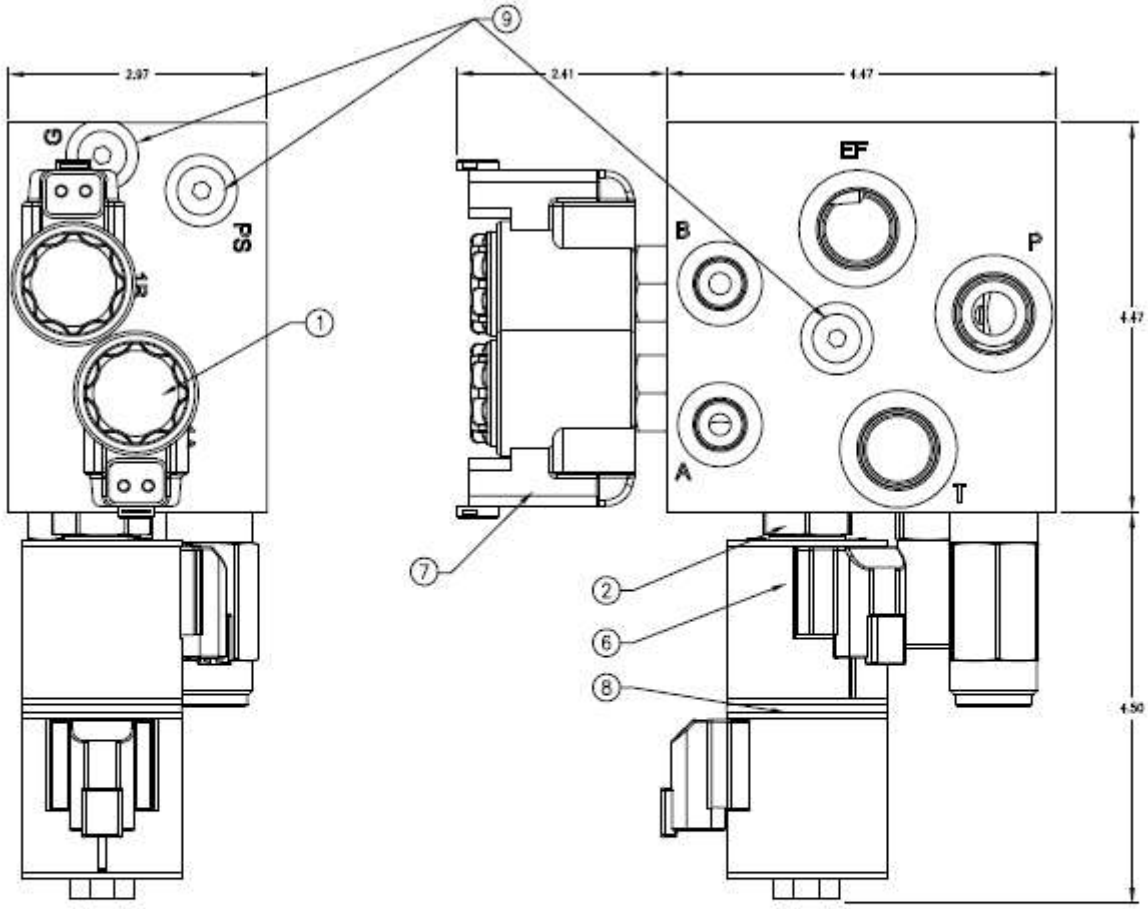

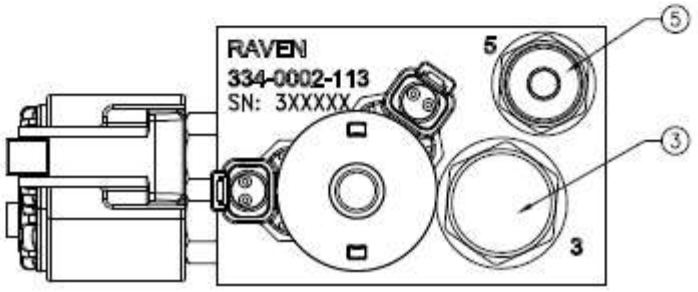

Parts List 632021: Steerable Hitch Hydraulic Block Base

QTY. REQ'D.	NOMENCLATURE OR DESCRIPTION	PART OR IDENTIFYING NO.	SPECIFICATION	MATERIAL OR NOTE	ITEM NO.
3	FTG., PLUG, 7/16-20, O-RING SEAL INTERNAL SEAL	333-0012-051	6409-4	TORQUE: 12-14 FT LBS	9
1	SPACER, COIL, ER-10/12	334-0002-119	4539700		8
2	COIL, 12VDC, DN-40, DTSCH., DT04-2P, CONN. SIZE 8	334-0002-118	03012600	TORQUE: HAND (5 FT LBS)	7
2	COIL, 12VDC, ER, DEUTSCH., DT04-2P, SIZE 10/12	334-0002-117	4303712	TORQUE: HAND (5 FT LBS)	6
1	CARTRIDGE, HYDRAULIC RELIEF, DIFFERENTIAL AREA, -10	334-0002-103	RV10-26H-0-N-30/29	TORQUE: 24-26 FT LBS	5
1	MANIFOLD, HYDRAULIC, OPEN CENTER, SMARTRAX	334-0002-113			4
1	CART., HYD., PRESS. COMP., PRIORITY ON DEMAND, -12	334-0002-102	EC12-42-0-N-80 (8)	TORQUE: 34-36 FT LBS	3
1	CART., HYD., PROP., DIR., 5-WAY, 3-POS., N. C., -10	334-0002-097	SP10-5802C-0-N-0	TORQUE: 24-26 FT LBS	2
2	CART., HYD. BLOCKER, SINGLE, NORM. CLOSED, -08	334-0002-096	WSOBZR-01-C-N-0	TORQUE: 18.5-22 FT LBS	1

Standard Grease Skip Row Duals Hose Kit

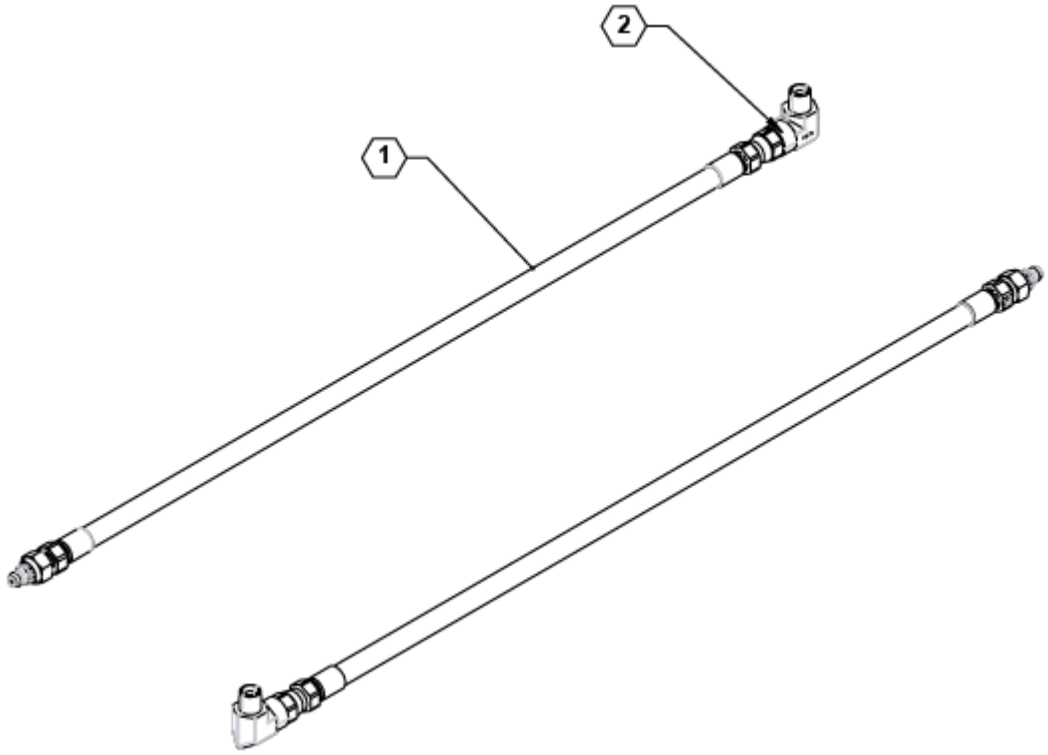

Parts List 600143: Standard Grease Skip Row Duals Hose Kit

ITEM	PART NO.	QTY.	DESCRIPTION
1	**600143-1-ZN**	2	HOSE ASSY, 02-NPTX-2GREASE-18
2	**610184**	2	FITTING, -2MPT X -2FPT 90

CAB BOX ELECTRICAL

Cab Fold Box

Parts List 632207: Cab Fold Box

PART #	QTY	DESCRIPTION	ITEM #
053-0159-181 (A1)	1	BOX, SHIPPING	1
115-0172-011	1	CABLE, CAN/POWER, ISO, SWITCHBOX, JOHN DEERE	2
053-0159-019	1	BOX, SHIPPING	3
053-0159-275	1	INSERT, KORRVU	4
063-0173-745	1	SWITCHBOX, FOLD, FAST ISO	5
053-0159-110	1	ENVELOPE, PLASTIC	6
311-0001-007	2	SCREW, 8-32 UNC x 5/16	7
311-0001-013	2	SCREW, 8-32 UNC x 1/2" PHL	8
313-4000-007	2	WASHER, #8 LOCK, EXT STL ZINC	9

This switchbox (063-173-745) is non-serviceable.

For the entire AutoFold 120’/132’ kit, ask a Fast Ag Solutions Dealer for 632207.

Cab Agitation & Rinse Box

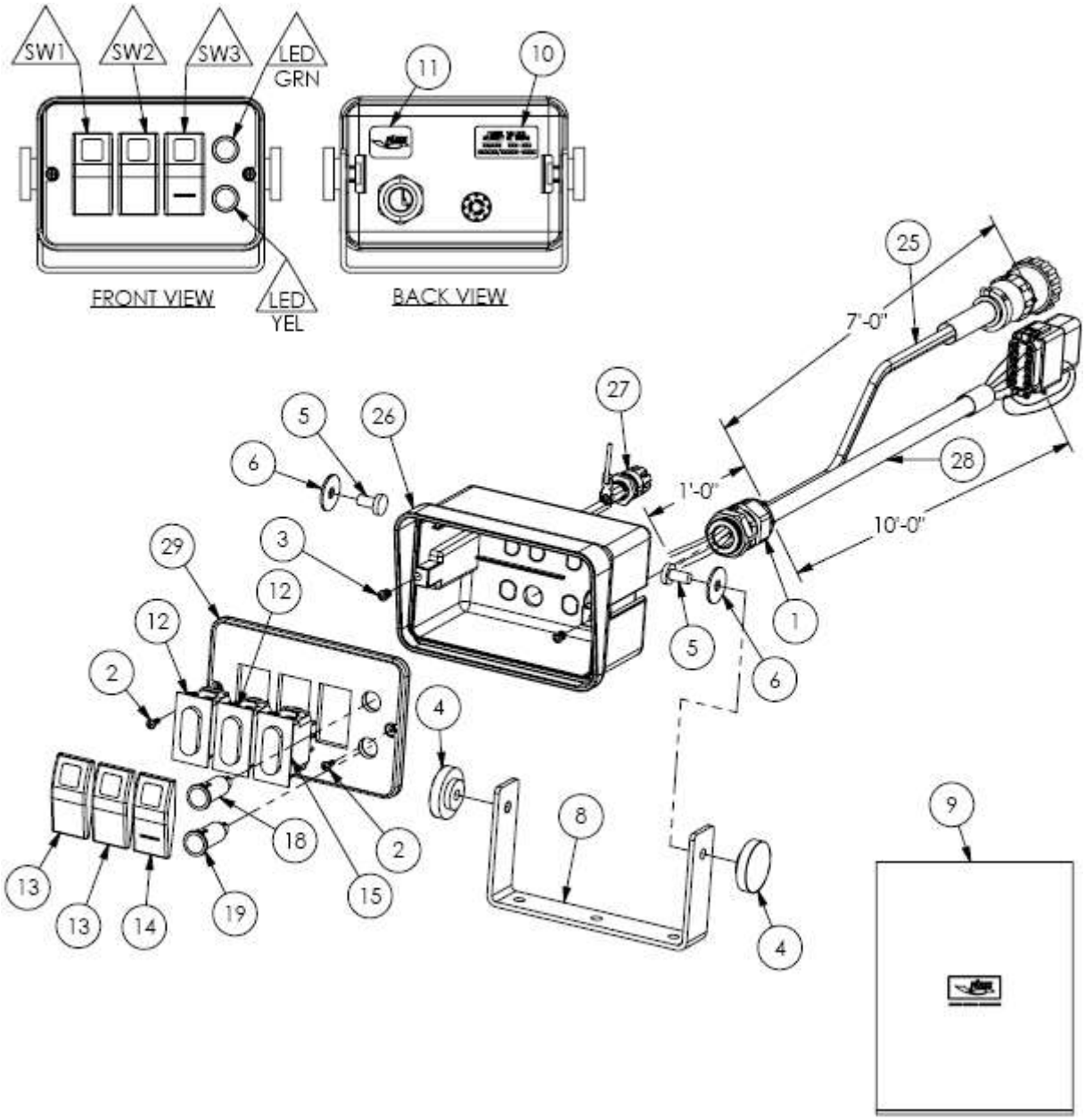

Parts List 632155: Cab Agitation & Rinse Box

NO.	PART NUMBER	QTY	PART DESCRIPTION
1	210-710	1	STR RLF HEYCO .23"-.54"ID, HOLE DIA .886"
2	212-184	2	SCREW PHIL PAN #6-32X3/8" BLK
3	212-202	2	SCREW INSERT BRASS #6-32X3/8"
4	212-215	2	KNOB FEMALE 1/4"-20
5	212-231	2	SCREW WELDED 1/4"-20X.625"
6	213-335	2	WASHER NYLON FLAT 1/4"-20
7	214-002	3	CABLE TIE BLK 8.5"
8	219-300	1	BRKT MNTR BLK AL
9	230-057	1	BAG POLY 14X18 2MIL LOGO
10	232-050	1	DECL S/N SILVER
11	232-058	1	DECAL FASSE BLK/GOLD 1"X.75" RND CRNR
12	250-242	2	SW RCK CONTURA BODY ONLY SPST 2P STAT CLEAR LED 12V
13	250-243	2	SW RCK CONTURA II ACTUATOR ONLY RED LENS BLK
14	250-244	1	SW RCK CONTURA II ACTUATOR ONLY RED/RED LENS BLK
15	250-245	1	SW RCK CONTURA BODY ONLY SPST 3P STAT CLEAR/CLEAR LEDS 12V
16	252-058	14"	WIRE 18GA BLK
17	252-059	14"	WIRE 18GA RED
18	254-179	1	LED GRN 12V 5/8"DIA SNAP FLUSH 1/4" MALE TRM
19	254-182	1	LED YEL 12V 5/8"DIA SNAP FLUSH 1/4" MALE TRM
20	255-002	6	TRM PO T-TAP F 18-14GA
21	255-006	7	TRM PO F INS 22-18GA
22	255-030	3	TRM SPLICE CLOSED END 16-18GA
23	255-119	1	TRM PO F INS 16-14GA
24	255-285	1	TRM SPLICE CLOSED END LRG 14-16GA
25	314-001	1	HRN 2CON 14GA AMP PLUG 3P(2) 8'
26	319-725	1	ENCL MNTR BOX 4.75"X3"X2"
27	320-529	1	FUSE HOLDER PM ASSY 7.5A .5'
28	320-607	1	HRN 12CON 18GA DTP KEY B 12P(12) 11' END CAP
29	320-609	1	ENCL DRILL FP MNTR RCK3 LED2 F00204

See also: Distribution, Agitation & Rinse

Cab Agitation & Rinse Box Harness

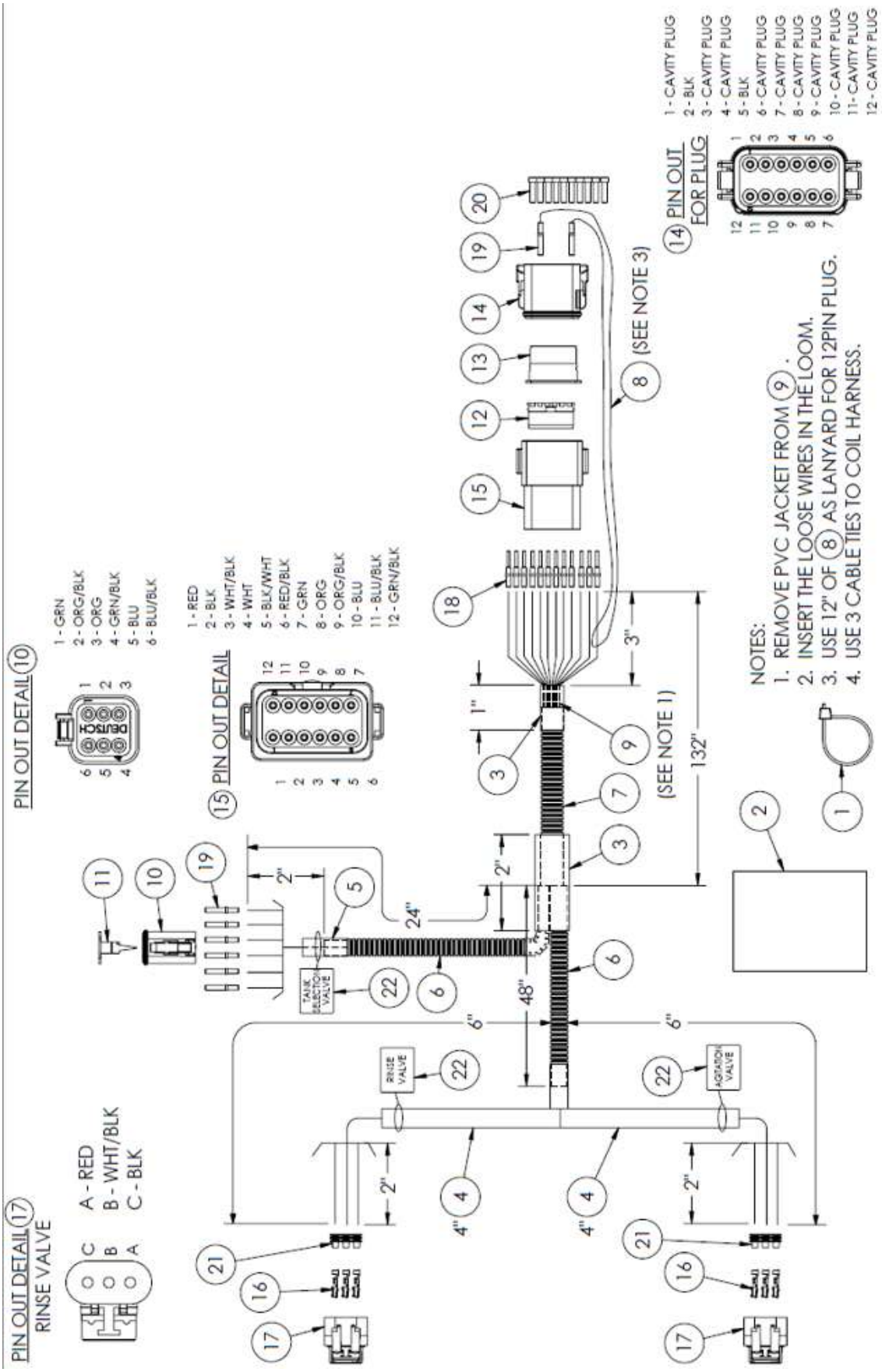

Parts List 632156: Cab Agitation & Rinse Box Harness

NO.	PART NUMBER	QTY	PART DESCRIPTION
1	214-002	3	CABLE TIE BLK 8.5"
2	230-007	1	BAG POLY 14X18 2MIL
3	231-009	3"	SHRINKTUBING .500" BLK
4	231-187	8"	SHRINKTUBING .187" BLK
5	231-375	2"	SHRINKTUBING .375" BLK
6	252-012	70"	LOOM 0CON .250" ID BLK
7	252-013	129"	LOOM 0CON .350"ID BLK
8	252-058	12"	WIRE 18GA BLK
9	252-064	15.5'	CABLE 12CON 18GA PVC GRY
10	255-209	1	CONN DEUT DT PLUG 6PIN
11	255-211	1	CONN DEUT LOCK WEDGE 6PIN DTP ORG
12	255-214	1	CONN DEUT LOCK WEDGE 12PIN DTR GRN
13	255-215	1	CONN DEUT LOCK WEDGE 12PIN DTP ORG
14	255-594	1	CONN DEUT DT PLUG 12PIN KEY B
15	255-625	1	CONN DEUT RCPT 12PIN KEY B
16	255-627	6	CONT M/P 150.2 PTS F 16-18GA
17	255-628	2	CONN M/P 150.2 PTS F 3PIN 16-18GA
18	255-977	12	CONT DEUT PIN 16-18GA
19	255-978	8	CONT DEUT SOCKET SIZE 16 16-20GA
20	255-979	10	CONT DEUT CAVITY PLUG
21	255-990	6	CONT M/P 150.2 PTS CABLE SEAL 16-18GA WHT
22	307-182	1	LABEL KIT FOR 320-612

Cab Display, Raven CR7

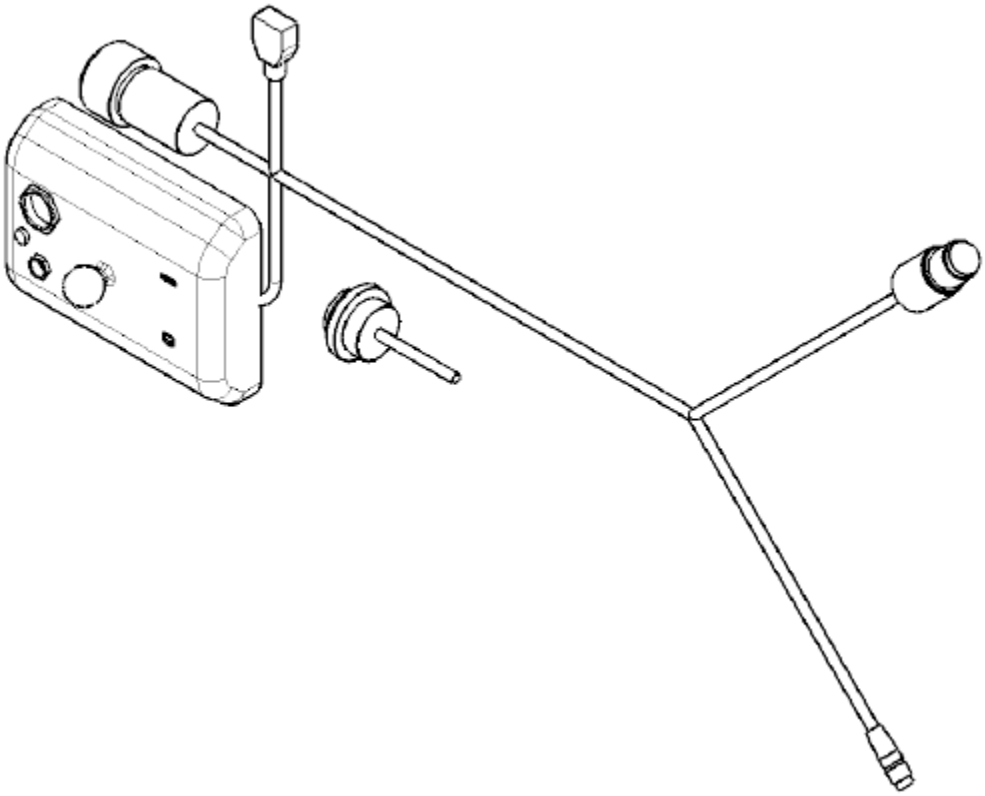

Parts List 9920RACR7ISOPH / 9920RACR7ISOPHJD / 9920RACR7ISOH: Cab Display, Raven CR7

ITEM	PART NO.	QTY.	DESCRIPTION
1	**632063**	1	RAVEN PRECISION CR7 DISPLAY
2	**632066**	1	CABLE, CR7 ISO VT ONLY
3	**632064**	1	CABLE, RAVEN ISO/POWER
	632065		CABLE, CAN/POWER OEM ISO
	632067		CABLE, DISPLAY PORT, Y ADAPTER

LIGHTS, DECALS, & TAGS

Night Light Schematic (830020)

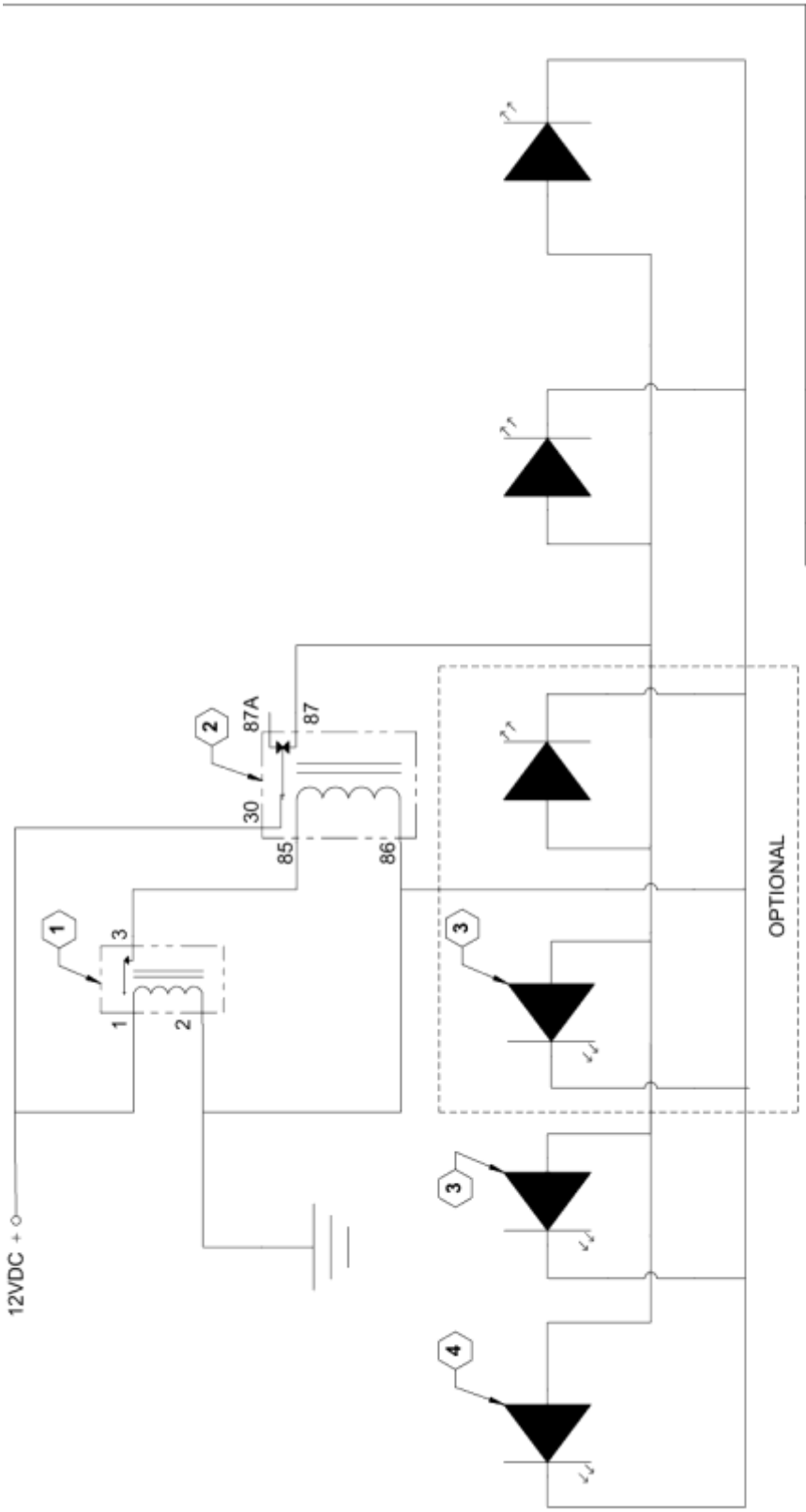

NO.	PART	DESCRIPTION	RATED CURRENT
1	632121	PROX SWITCH	5A
2	740079	RELAY	50A
3	740090	BLUE LED	3.3A
4	740082	RED LED	0.5A

Blue Lights (for Truss Boom)

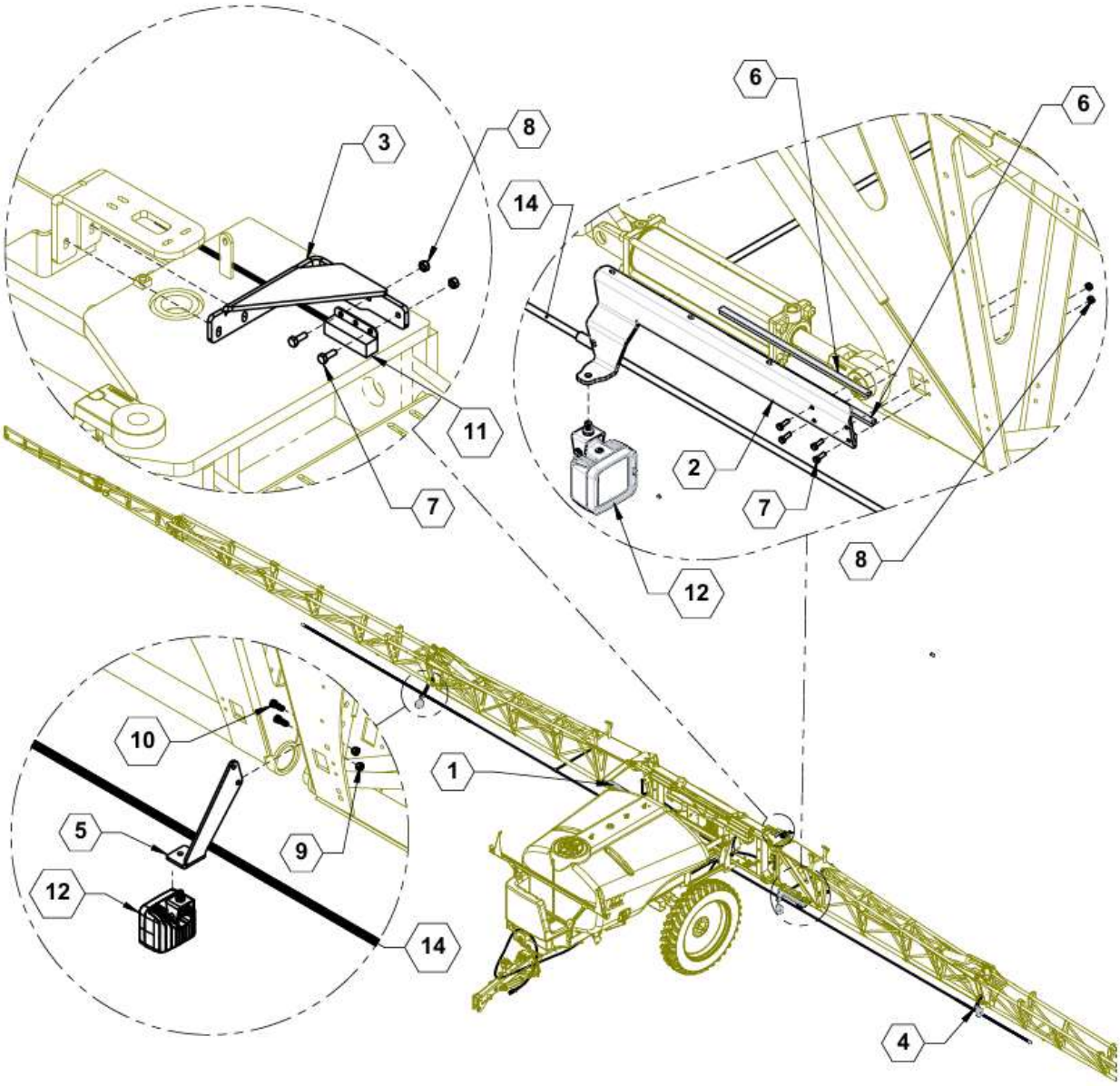

Parts List 28750 / 39698: Blue Lights (for Truss Boom)

ITEM	PART NO.	QTY.	DESCRIPTION
1	**28940**	1	PLATE, RH SPRAY LIGHT BRACKET
2	**28942**	1	PLATE, LH BLUE SPRAY LIGHT MOUNT
3	**28949**	1	PLATE, PROX SWITCH MOUNT
4	**39694L**	1	BRACKET, OUTER BLUE LIGHT
5	**39694R**	1	BRACKET, OUTER BLUE LIGHT
6	**590459**	5	(FT) TRIM, EDGE GUARD 1/4
7	**596101M**	10	BOLT, HH 1/4-20 X 3/4 GR5 MAGNI
8	**596235M**	12	NUT, CENTERLOCK, 1/4-20 MAGNI
9	**596237M**	4	NUT, CENTERLOCK 3/8-16 MAGNI
10	**596327M**	4	BOLT, HH 3/8-16 X 1 GR8 MAGNI
11	**632121**	1	PROX SWITCH, PARKER
12	**740090**	2 / 4	LIGHT, LARSEN BLUE, 40W 7DEG
	740058		(pre 2025 W/O RELAY SOCKET ON CENTER SECTION) LARSEN BLUE LED SPRAY LIGHT
N/S	**740092**	1	HARNESS, POWER LIGHTS SPRAYER
14	**740093**	1	HARNESS, NIGHT LIGHTS 4BLU
	740076		HARNESS, NIGHT LIGHTS
N/S	**740083**	2	EXTENSION, 2P DEUTSCH HARNESS 6FT

Road Light Harness

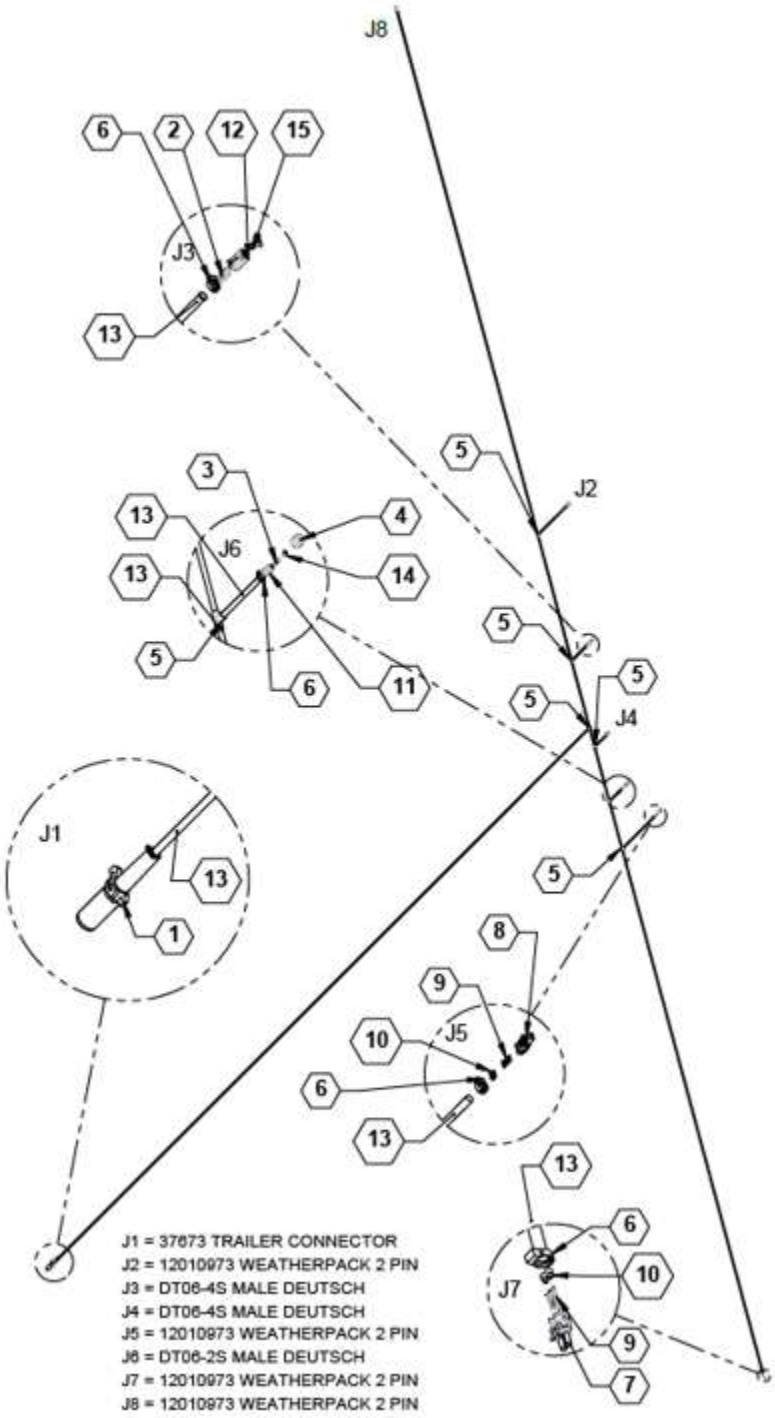

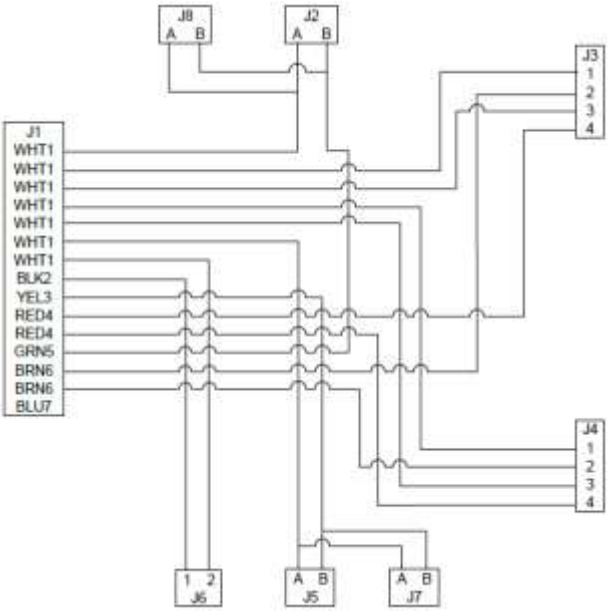

Parts List 740086 / 740092: Road Light Harness

ITEM	PART NO.	QTY.	DESCRIPTION
1	**11-704**	1	WAYTEK POLLAK 7-WAY TRAILER CONNECTOR
2	**0462-201-16141**	8	DEUTSCH SIZE 16 FEMALE SOCKET
3	**0462-209-16141**	2	DEUTSCH FEMALE SOCKET 14 GA
4	**1011-344-0205**	1	DEUTSCH DT 2 PIN DUST CAP
5	**8905798**	5	WAYTEK DELPHI .41" LOOM TEE
6	**8911295**	1	WAYTEK DELPHI .625-.413" LOOM TEE
7	**8911378**	7	DELPHI .413 CONDUIT CLIP
8	**12010973**	2	DELPHI MALE 2-CONTACT WEATHER PACK
9	**12015792**	2	DELPHI MALE 2-CONTACT WEATHER PACK
10	**12089188-L**	8	18-20GA FEMALE TERMINAL
11	**15324982**	8	WAYTEK DELPHI 280 SERIES CABLE SEAL GREEN
12	**DT06-2S**	1	CONNECTOR, MALE DEUTSCH DT06-2S
13	**DT06-4S**	2	CONNECTOR, MALE DEUTSCH DT06-4S
14	**LCN-413**	1	WAYTEK 1/2 CORRUGATED LOOM BLACK
15	**W2S-P012**	1	DEUTSCH DT 2 PIN WEDGE LOCK PLUG
16	**W4S-P012**	2	DEUTSCH 4 PIN WEDGE LOCK GREEN
17	**WG-14-BL**	1	BLACK - 14 GA WIRE
18	**WG-14-BR**	1	BROWN - 14 GA WIRE
19	**WG-14-RE**	1	RED - 14 GA WIRE
20	**WG-14-WH**	1	WHITE - 14 GA WIRE
21	**WG-18-BL**	1	BLACK - 18 GA WIRE
22	**WG-18-RE**	1	RED - 18 GA WIRE
23	**WG-18-WH**	1	WHITE - 18 GA WIRE

Plumbing and Operator Platform Decals

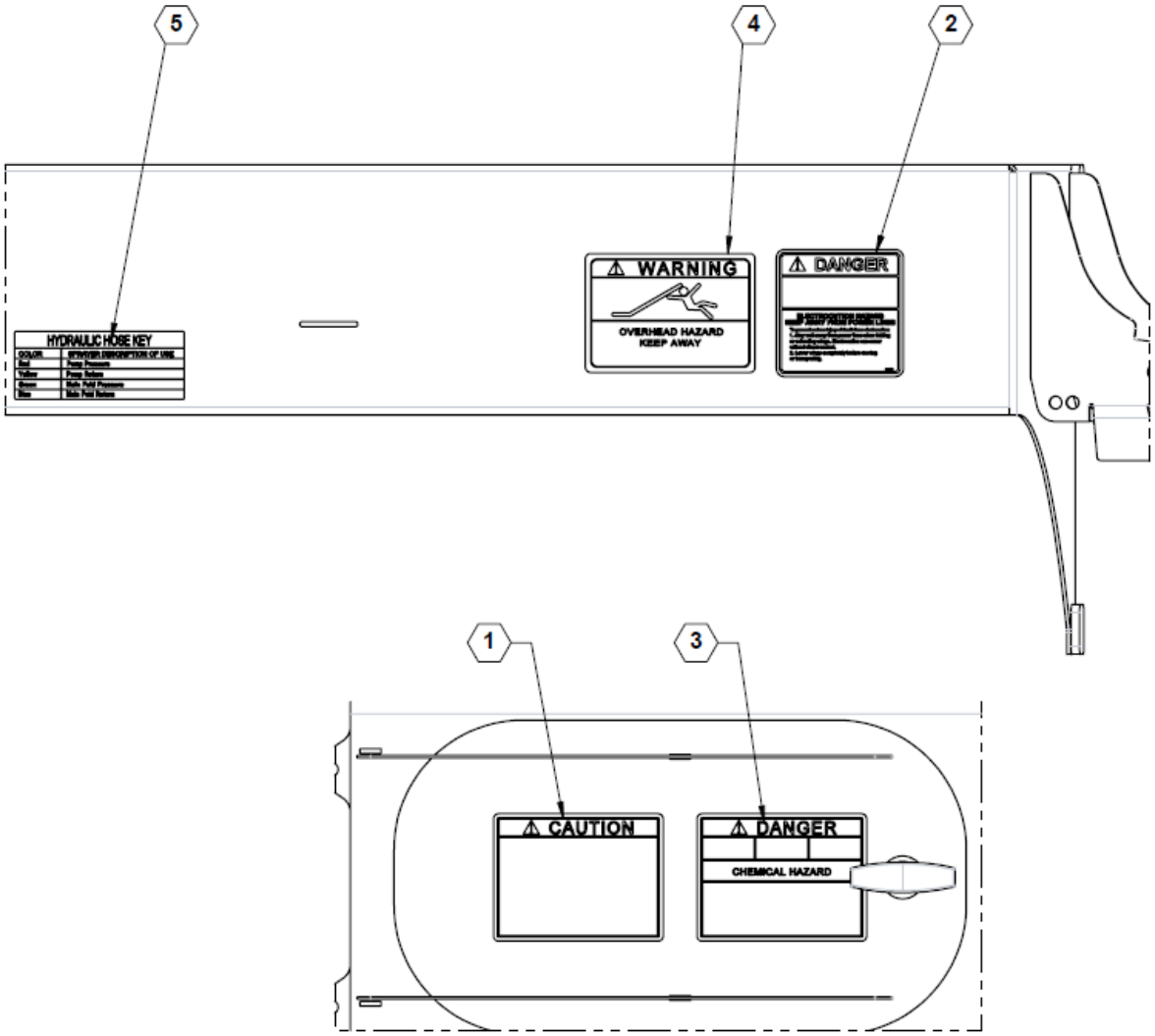

Parts List 36601: Plumbing and Operator Platform Decals

ITEM	PART NO.	QTY.	DESCRIPTION
1	**800002**	1	DECAL, CAUTION, STD SAFETY WARNINGS
2	**800006**	1	DECAL, DANGER ELECTROCUTION HAZARD
3	**800007**	1	DECAL, DANGER-CHEMICAL HAZARD
4	**800009**	1	DECAL, OVERHEAD WARNING
5	**800208**	1	DECAL, SPRAYER HYD HOSE KEY

Slow-Moving-Vehicle Sign Assembly

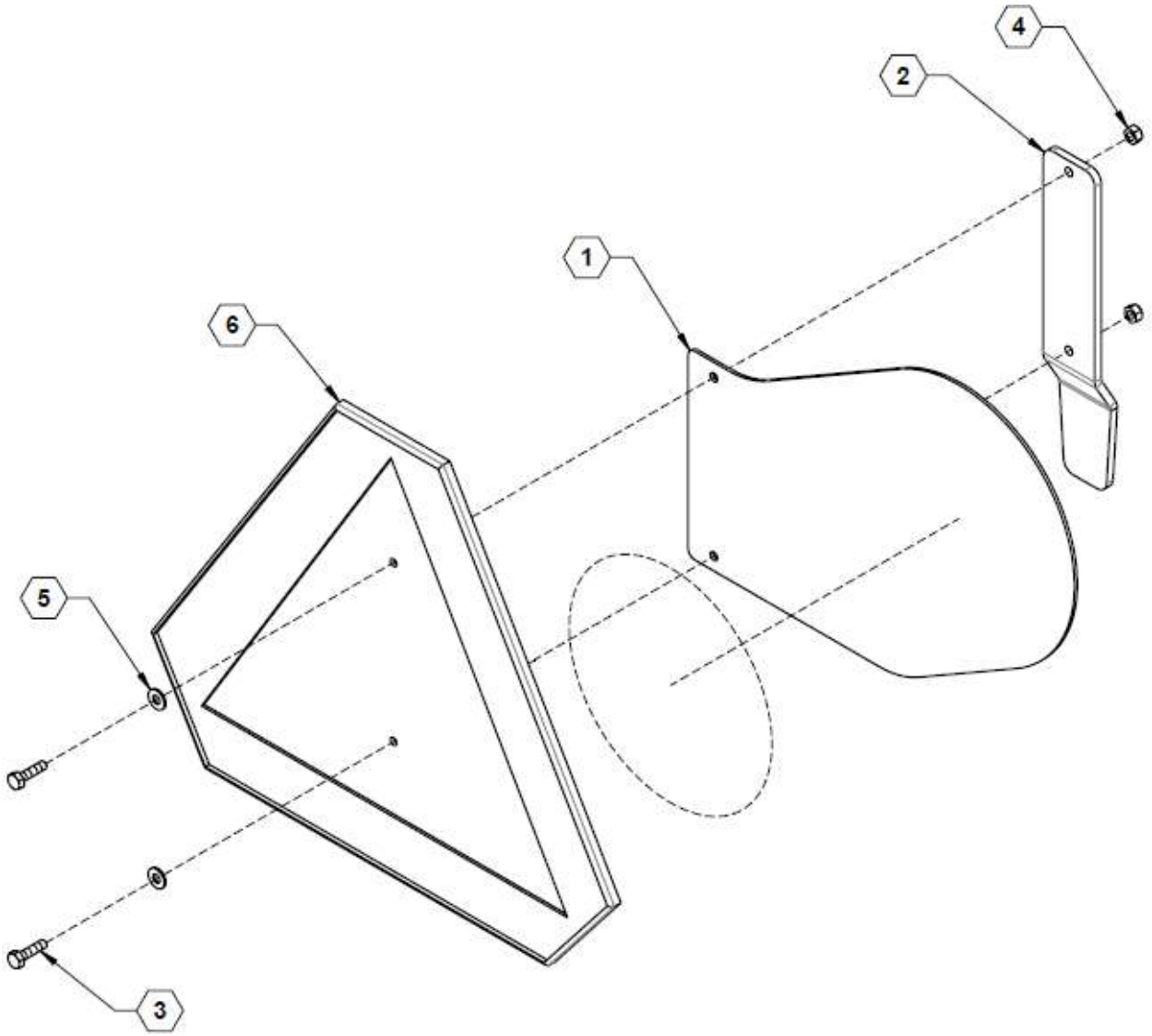

Parts List 90SASMVWOSIS: Slow-Moving-Vehicle Sign Assembly

ITEM	PART NO.	QTY.	DESCRIPTION
1	**28251**	1	PLATE, SIS MOUNT
2	**28252**	1	PLATE, SMV MOUNT
3	**596102M**	2	BOLT, HH 1/4-20 X 1 GR5 MAGNI
4	**596227M**	2	NUT, HEX NYLOCK 1/4-20 MAGNI
5	**596256M**	2	WASHER, FLAT 1/4 USS MAGNI
6	**790017**	1	SIGN, SMV PLASTIC MOLDED

Speed Decal

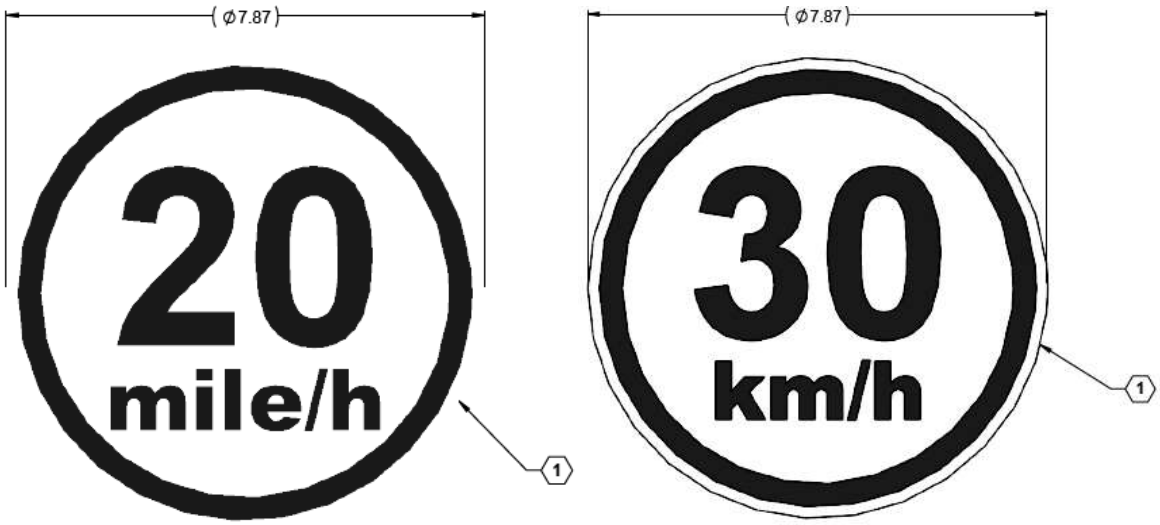

Parts List: Speed Decal

ITEM	PART NO.	QTY.	DESCRIPTION
1	**35832**	1	OPTION, 20 MILE/H DECAL
	35833	1	OPTION, 30 KM/H DECAL

Fast Ag Solutions
4130 Commerce Boulevard
Windom, MN 56101

1-800-772-9279 Toll Free
1-507-427-3861 Voice
1-507-427-3030 Fax

https://fastagsolutions.com/